N° 18 F.

Mrs Thorne. Writing Bureau

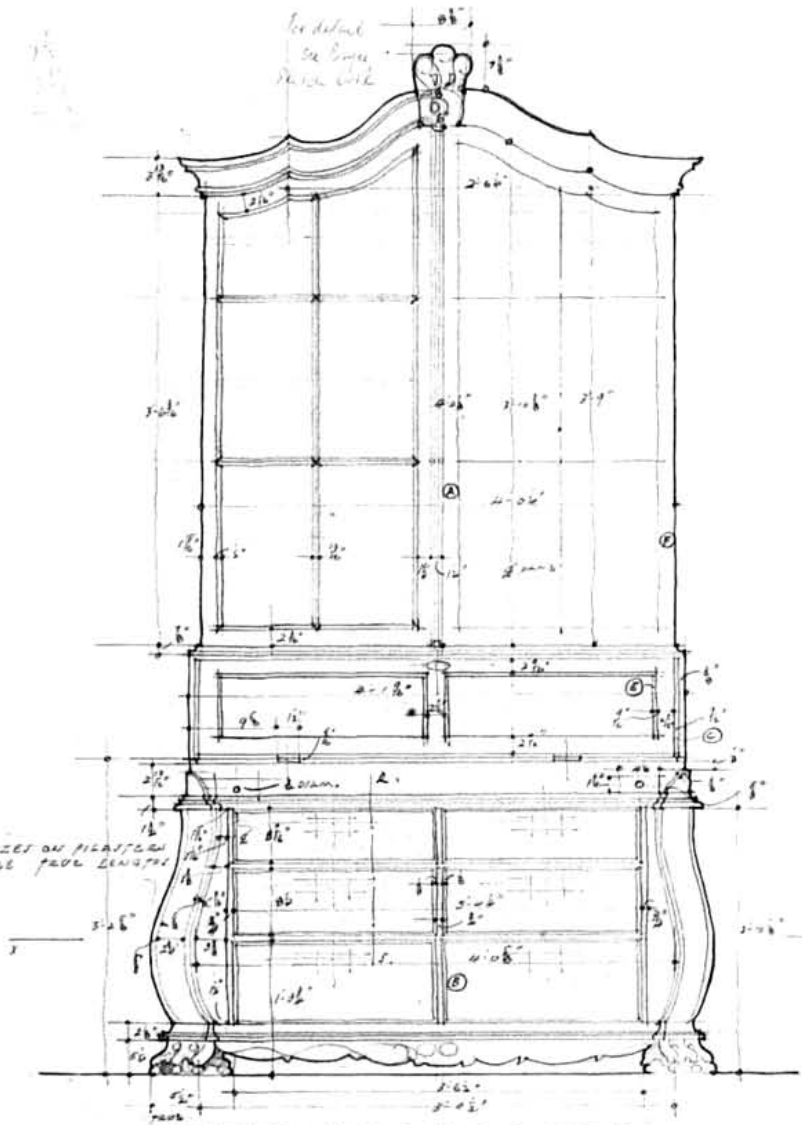

FRONT ELEVATION.

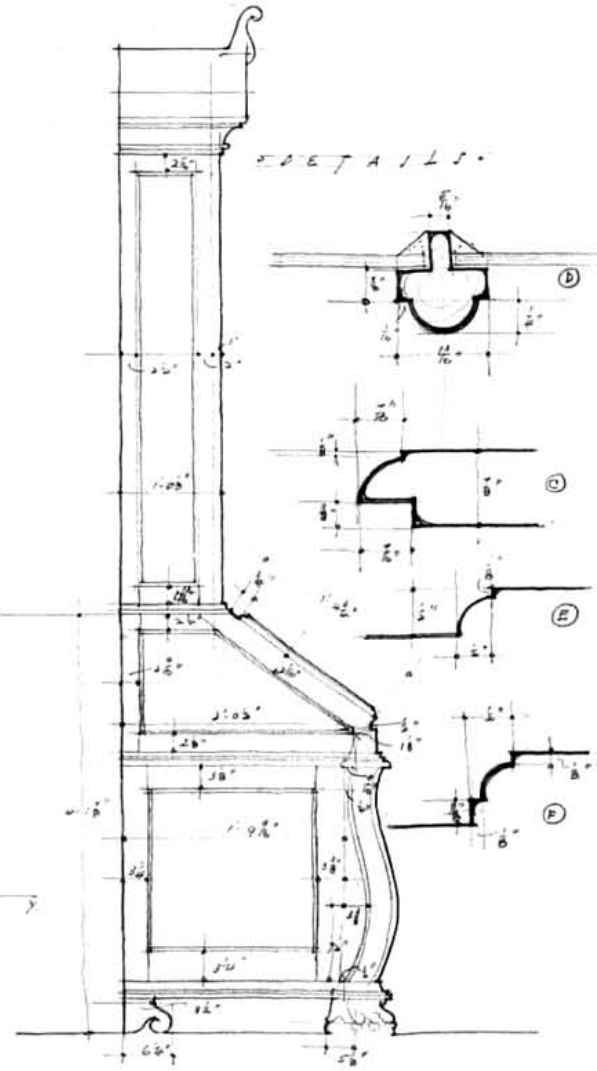

SIDE ELEVATION.

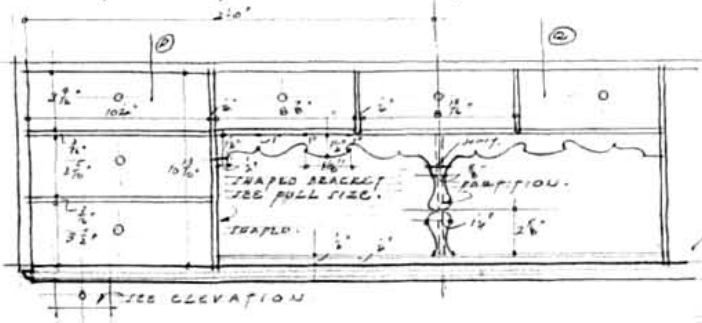

INTERNAL DRAWERS.

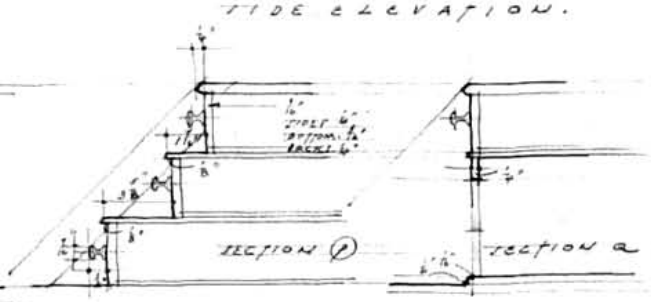

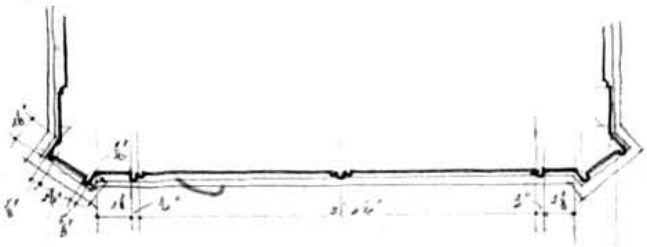

PLAN X.Y.

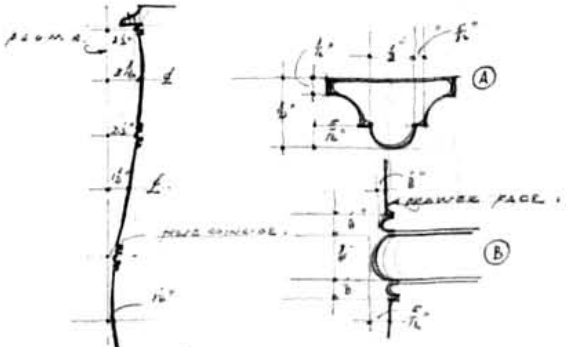

SECTION R-S.