Onderstepoort J vet. Res., 52, 133–144 1985

BOVINE LEUKAEMIA VIRUS AND ENZOOTIC BOVINE LEUKOSIS

A. BURNY*,**, C. BRUCK*, Y. CLEUTER*, D. COUEZ*, J. DESCHAMPS*, D. GREGOIRE*, J. GHYSDAEL*, R. KETTMANN*,**, M. MAMMERICKX***, G. MARBAIX ** and D. PORTETELLE*,**

ABSTRACT

BURNY, A., BRUCK, C., CLEUTER, Y., COUEZ, D., DESCHAMPS, J., GREGOIRE, D., GHYSDAEL, J., KETTMANN, R., MAMMERICKX, M., MARBAIX, G. & PORTETELLE, D., 1985 Bovine leukaemia virus and enzootic bovine leukosis. *Onderstepoort Journal of Veterinary Research*, 52, 133–144 (1985).

Infection of bovines with bovine leukaemia virus (BLV) manifests itself in either of two ways: 30–70 % of carriers develop persistent lymphocytosis (PL), with the viral genome integrated at a large number of different sites in the DNA of the affected B-lymphocytes, without causing any chromosomal abnormalities. Only 0,1–10 % of carriers develop lymphoid tumours, which also consist of B-lymphocytes. In contrast to PL, however, they are of mono- or oligoclonal origin in terms of the integration site, which is characteristic for each tumour. All cells contain one or more copies of the viral genome, chromosomal aberrations are common and if deletions are present they are invariably found in the 5′-half of the virus DNA sequence. In both types of affected cells transcription is repressed *in vivo*, but transient virus production can be induced *in vitro* and detected by means of syncytia induction or haemagglutination. *In vivo* production of virus in some unknown cell is suggested by the presence of high antibody titres in infected animals, especially against the envelope glycoprotein gp51. This can be detected by various techniques such as immunodiffusion, radioimmune assay or ELISA. Monoclonal antibodies against gp51 have revealed 8 epitopes, 3 of which are recognized by neutralizing antibodies and one by a cytolytic antibody.

The BLV genome, about 9 kb in size, have been cloned, and some of the information obtained on its molecular structure and function is discussed. It codes for at least 4 non-glycosylated and 2 glycoproteins. Of special interest is the recently discovered serological relationship between some of the non-glycosylated proteins and those of the human T-cell leukaemia virus.

The functional role of BLV in leukaemogenesis is largely unknown. The presence of the viral genome seems to be necessary for the maintenance of the transformed state, but not its continuous expression nor an LTR-mediated promotion of transcription of cellular genes. No oncogene is carried by the virus.

Although bovine leukosis is not of major economic importance, its eradication is desirable and feasible in countries with a relatively low incidence, by means of testing and elimination. For endemic situations vaccination would be preferable, and distinct possibilities exist for the development of gp51 based vaccines.

INTRODUCTION

Lymphoid leukosis is the most common neoplasm of the bovine species. Two classes of bovine leukosis have been distinguished on the basis of their pathology and seroepidemiology. Sporadic bovine leukosis (SBL) is observed throughout the world as solitary cases within a herd. It is a non-contagious disease with no known viral aetiology. Lymphoid tumours, either multicentric, cutaneous or thymic, are generally observed in young animals (4 months to 1 year old) and tumour cells appear to be of non-B cell lineage. Enzootic bovine leukosis (EBL) is a highly contagious disease induced by a retrovirus, bovine leukaemia virus (BLV), exogenous to the bovine species. It is a chronic disease evolving over extended periods (1–8 years), with tumours developing in only a small number of infected animals (0,1 to 10 %).

In this review, I will discuss what is known about enzootic bovine leukosis, with special focus on the properties of its aetiological agent, BLV. This knowledge had and will have obvious applications in the development of more adequate methods for the control and eradication of EBL. Besides these practical considerations and because EBL is caused in an essentially outbred species by a virus spreading under natural conditions, this system provides an interesting model for both persistent viral infections and for retrovirus induced leukaemia at the cellular, individual and population levels.

* Laboratoire de Chimie Biologique, Université Libre de Bruxelles, 67, Rue des Chevaux, 1640 Rhode-St-Genèse, Belgium

** Faculté des Sciences Agronomiques de l'Etat, 5800 Gembloux, Belgium

*** Institut National de Recherches Vétérinaires, 99, Groeselenberg, 1170 Bruxelles, Belgium

BLV AS THE AETIOLOGICAL AGENT OF ENZOOTIC BOVINE LEUKAEMIA

BLV in its natural host

In natural conditions, infection of healthy cattle by BLV occurs mainly horizontally but also congenitally (see p. 141). Once infected, the animals, although showing no sign of overt viraemia, elicit a strong and persistent humoral response to BLV structural proteins. The site and mechanism of BLV persistence are unknown. The majority of infected animals remain healthy and do not show any loss in production (Langston, Ferdinand, Ruppanner, Theilen, Drlica & Behymer, 1978; Huber, Digiacoma, Evermann & Studer, 1981; Burridge, Thurmond, Puhr, Wilcox & Simerl, 1982).

Depending on several ill-defined parameters, including genetic and environmental factors, between 30 to 70 % of BLV carriers develop a form of the disease known as persistent lymphocytosis. Persistent lymphocytosis is characterized by an increase in circulating B-lymphocytes as evidenced by the presence of surface immunoglobulins and Fc-receptors on the circulating cells. Depending on the animal, this B-lymphocyte population represents between 40–80 % of the total lymphocyte population (vs. 15–20 % in healthy individuals) (Muscoplat, Johnson, Pomeroy, Olson, Larson, Stevens & Sorensen, 1974; Weiland & Straub, 1975; Paul, Pomeroy, Castro, Johnson, Muscoplat & Sorensen, 1977a; Kenyon & Piper, 1977; Kumar, Paul, Pomeroy, Johnson, Muscoplat, Van der Maaten, Miller & Sorensen, 1978).

BLV is present in a subpopulation of circulating B-lymphocytes of animals in PL (Paul *et al.*, 1977a; Paul, Pomeroy, Johnson, Muscoplat, Handwerger, Soper & Sorensen, 1977b; Kettmann, Burny, Cleuter, Ghysdael & Mammerickx, 1978; Kettmann, Cleuter, Mammerickx, Meunier-Rotival, Bernardi, Burny & Chantrenne,

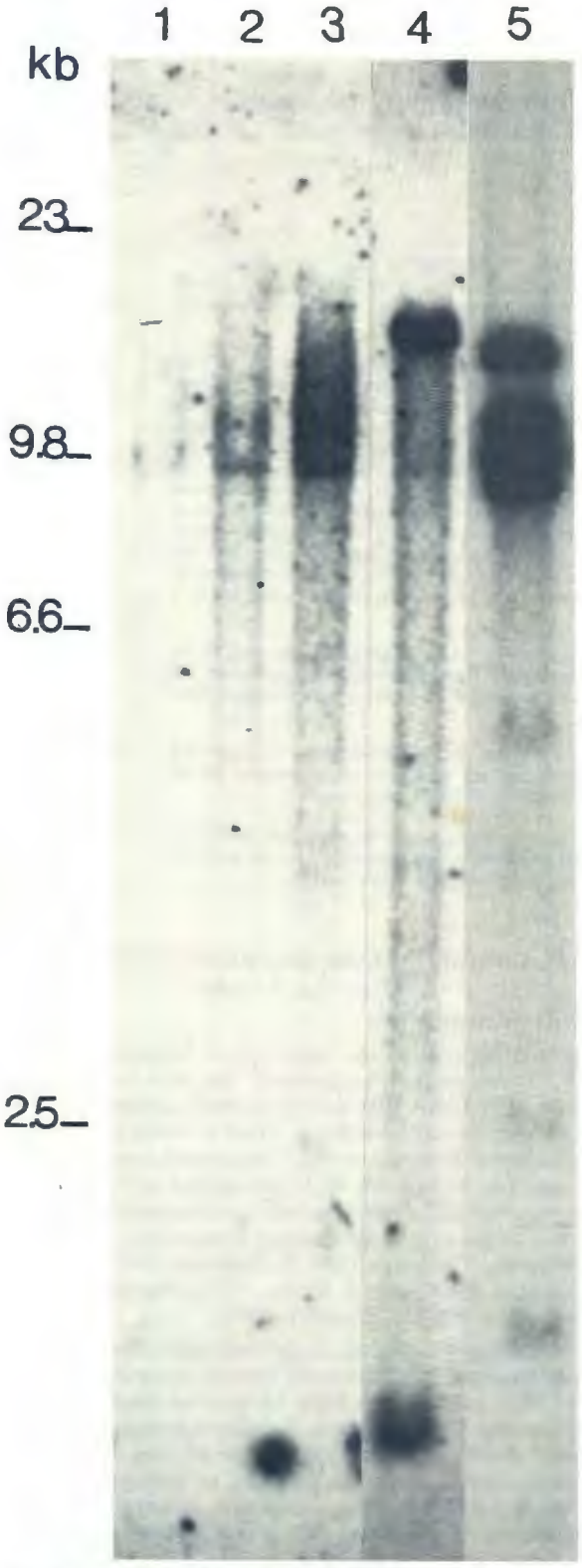

FIG. 1 Normal bovine DNA (lane 1), DNA from circulating lymphocytes of animals in persistent lymphocytosis (PL) (lanes 2 and 3) and DNA from tumours (lanes 4 and 5) were digested with EcoRI and analysed by southern blotting with cloned labelled BLV provirus as a probe. DNAs from PL cases show a smear of hybridizing fragments, whilst tumour DNAs exhibit discrete bands of hybridization. The EcoRI site of BLV provirus being unique, the pattern in lane 4 is representative of a tumour cell clone harbouring one proviral copy. The picture shown in lane 5 indicates that, in this case, 4 proviral copies reside in the genome of the tumour cell.

1980) where its genetic information is found integrated at a large number of sites in the cellular DNA (Kettmann *et al.*, 1980). Besides being polyclonal with respect to the integration site of the provirus, circulating PL lymphocytes exhibit no chromosomal abnormalities (Hare, Yang & McFeely, 1967), properties that clearly contrast with those made at the tumour stage of the disease (*vide infra*).

Only a small percentage (0,1 %–10 %, depending on non-defined genetic factors) of BLV infected animals, whether or not in PL, develop lymphoid tumours. The symptoms and the anatomopathological and histopathological lesions of BLV-induced tumours have been reviewed previously (Anderson, Jarrett & Crighton, 1968; Fujimoto, Miller & Olsen, 1969; Jarrett & Mackey, 1974; Wittmann & Urbaneck, 1969; Mammerickx, 1973; Burny, Bex, Chantrenne, Cleuter, Dekegel, Ghysdael, Kettmann, Leclercq, Leunen, Mammerickx & Portetelle, 1978).

Based on cytological, cytoenzymatological and immunochemical methods, and by analogy to the Kiel classification of human malignant lymphomas (Gerard-Marchand, Hamlin, Lennert, Rilke, Stanfeld & Van Unnik, 1974; Lennert, Stein & Kasserling, 1975), lymphocytes of BLV-induced tumours appear to be of the B-cell lineage (Parodi, Mialot, Crespeau, Levy, Salmon, Nogues & Gerard-Marchand, 1982), with a non-uniform phenotype of differentiation for tumour cells of different animals (Takashima, Olson, Driscoll & Baumgartener, 1977; Onuma, Honma, Mikami, Ichijo & Konishi, 1979; Parodi *et al.*, 1982).

Southern blot analysis of bovine tumour DNA for BLV proviral sequences demonstrate the viral genetic information to be present in most of the cells of all tumours (Kettman *et al.*, 1980a). Unlike the situation encountered in PL lymphocytes, tumour cells are mono- or oligoclonal for the site of BLV integration (Kettmann *et al.*, 1980). Individual tumours may contain 1–4 provirus(es), either complete or harbouring deletions and, when they occur, deletions affect the 5′ half of the proviral genetic information (Kettmann, Deschamps, Cleuter, Couez, Burny & Marbaix, 1982) (Fig. 1). No evidence has been observed so far for a common integration site for BLV provirus in different tumours. Defects in the ploidy of tumour cells are frequently detected, but do not appear to follow a common pattern in different tumours (Hare *et al.*, 1967)

In both PL and tumour cells, BLV proviral information appears to be repressed (Driscoll & Olson, 1977; Baliga & Ferrer, 1978; Devare, Oroszlan & Stephenson, 1978) and this lack of expression is controlled at the transcriptional level (Kettmann, Marbaix, Cleuter, Portetelle, Mammerickx & Burny, 1980; Marbaix, Kettmann, Cleuter & Burny, 1981; Kettmann *et al.*, 1982). When isolated from their host and maintained in short-term tissue culture, PL lymphocytes and, in some cases, tumour cells (C. Bruck, unpublished information) express viral mRNA and proteins and at least some of them produce viral particles (Miller, Miller, Olson & Gillette, 1969; Stock & Ferrer, 1972; Driscoll & Olson, 1977). This lack of expression clearly prevents cell lysis by antibody-mediated cytolytic mechanisms and allows the expansion of BLV-carrying cell clones. Indeed, all infected animals have high titre antibodies to BLV structural proteins and antibodies to the major envelope glycoprotein of the virus exhibit a strong cytolytic activity to BLV-producing cells, including tumourous lymphocytes in tissue culture (Portetelle, Bruck, Burny, Dekegel, Mammerickx & Urbain, 1978; Portetelle, Bruck, Mammerickx & Burny, 1980; Bruck, unpublished results). The mechanism by which BLV proviral transcription is repressed in PL and tumour lymphocytes is not understood. Besides the clear interference by virus neutralizing antibodies, recent experiments indicate that plasma

of BLV-infected cattle specifically contains a non-immunoglobulin protein molecule that blocks the transcription of the viral genome in cultured lymphocytes (Gupta & Ferrer, 1982; J. Ferrer, personal communication).

The continuous antigenic stimulation of the immune system of infected animals implies antigen production by cell-types either localized in areas inaccessible to antibody molecules or resistant to antibody-mediated lysis. No experimental data exist about the nature of these antigens (soluble or in viral particles) or the site of their production.

BLV in heterologous hosts

Natural cases of malignant lymphomas in sheep are rare, and the virus isolated from these appear indistinguishable from BLV (reviewed by Burny, Bruck, Chantrenne, Cleuter, Dekegel, Ghysdael, Kettmann, Leclercq, Leunen, Mammerickx & Portetelle, 1980).

In experimental situations, however, sheep can be easily infected by BLV with usually increasing titres of antibodies to viral structural proteins from the time of infection onward (reviewed by Burny *et al.*, 1980). A major difference exists between sheep and cattle pathology in that PL is a situation never observed in sheep. Also, tumours arise at higher frequency and after a much shorter latent period (1–3 years) than that observed in cattle. Anatomopathological lesions are comparable for tumours of sheep and cattle, but recent evidence indicates that sheep tumour cells are, in some cases at least, of the T cell lineage (Horvath, 1982). As in the bovine species, BLV-induced tumour cells in sheep are mono-or oligoclonal for BLV provirus integration site, and the proviral genetic information is not transcribed (R. Kettmann, unpublished results).

Only one case of lymphosarcoma development has been reported in goats experimentally infected with BLV. A 2nd case occurred recently in our experimental herd. Lymphoid tumours appeared 8–9 years post-infection in various organs and all tumourous tissues contained the same BLV-containing cell clone (Olson, Kettmann, Burny & Kaja, 1981; Mammerickx, unpublished data).

Experimental infections with BLV, as are evidenced by persistent antibody production, has been reported for chimpanzees (Van Der Maaten & Miller, 1976a), pigs, (Mammerickx, Portetelle & Burny, 1981; Baumgartener & Olson, 1982), domestic rabbit, cat, dog, deer, rat and guinea-pig (Baumgartener & Olson, 1982). In none of these species were overt viraemia and pathological disorders observed. No evidence for the production of BLV antibodies following BLV inoculation was reported for mouse, chipmunk, ground squirrel, japanese quail and chicken (Baumgartener & Olson, 1982). Infection by BLV has never been reported for human beings, even those potentially exposed to infectious virus or virus production material (reviewed by Van Der Maaten & Miller, 1977).

METHODS OF DETECTION OF BLV INFECTION

Direct methods of BLV assay

Syncytia induction by BLV. Syncytia induction (polykaryocytosis) by BLV, originally observed in tissue culture established from BLV-induced tumours (Cornefert-Jensen, Hare & Stock, 1969; Van der Maaten, Miller & Boothe, 1974; Ressang, Mastenbroek, Quak, Van Griensven, Calafat, Hilgers, Hageman, Souissi & Swen, 1974), has been studied in detail in several laboratories.

Depending on the assay conditions, 2 types of phenomena have been described as early and late polykaryocytosis.

Late polykaryocytosis is induced on appropriate monolayers of indicator cells either by BLV-infected lymphocytes or cell-free preparations of BLV; syncytia usually appear 4–8 days after initiation of the cocultures or by post-infection, respectively (Diglio & Ferrer, 1976). This method has been used as a BLV infectivity assay (Ferrer & Diglio, 1976) and since syncytia formation is specifically inhibited by natural antibodies to BLV also for the detection of BLV antibodies in infected animals (Benton, Soria & Gilden, 1978; Ferrer, Piper & Baliga, 1977). Early polykaryocytosis is induced in appropriate mammalian sarcoma virus-transformed cells cocultivated with BLV-producing cells (Guillemain, Mamoun, Levy, Irgens, Astier & Parodi, 1977; Irgens, Pinelli, Guillemain, Levy & Parodi, 1977; Ogura, Paulsen & Bauer, 1977) or infected with cell-free BLV preparations (Graves & Jones, 1981). Syncytia appear a few hours post-inoculation, are usually very large and develop in a dose-dependent function of BLV-infected effector cells (Guillemain *et al.*, 1977).

As for late polykaryocytosis, early polykaryocytosis is inhibited by sera containing antibodies to BLV gp51 and recent experiments have shown that monoclonal antibodies to BLV gp51 that neutralize infectivity also inhibit early polykaryocytosis (Bruck, Portetelle, Burny & Zavada, 1982b; see Detection of BLV antibodies).

Haemagglutination by BLV. Recent experiments show that cell-free preparations of BLV are able to specifically agglutinate mouse erythrocytes (Sentsui, Thorn, Komo & Ferrer, 1982). The BLV haemagglutinin appears to be BLV gp51, since purified gp51 has haemagglutinating activity.

Detection of BLV antibodies

Antibodies to virtually all known BLV structural proteins are present in the sera of infected cattle and sheep (reviewed by Burny *et al.*, 1978a; 1980). In most cases, antibody titres are the highest to the gp51 major envelope glycoprotein. Several lines of evidence indicate that the natural antibody response of an infected animal is directed toward a very limited number of possible antigenic regions of gp51.

(i) Natural antibodies to gp51 recognize only some of the antigenic sites of gp51 reacted against by antibodies prepared in rabbits to purified gp51 (Portetelle *et al.*, 1980).

(ii) Among mouse monoclonal antibodies prepared against purified gp51 and recognizing 8 distinct antigenic sites on the molecule (Bruck, Mathot, Portetelle, Berte, Franssen, Herion & Burny, 1982a),

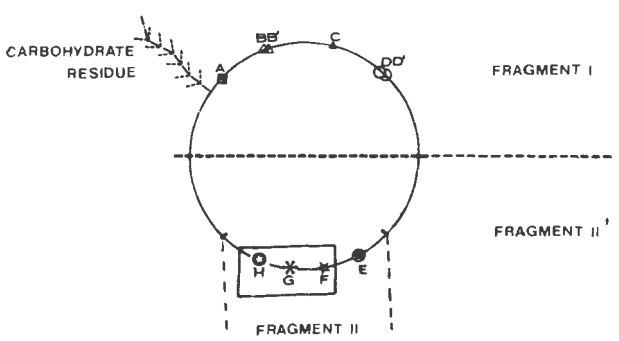

FIG. 2 Model for the location of the epitopes recognized by mouse monoclonal antibodies on the gp51 molecule. Fragment I has a MW of 35 000, harbours 6 epitopes and is glycosylated. Fragment II has a MW of 15 000, harbours 4 epitopes and is glycosylated only to a very limited extent. Epitopes F, G, H are responsible for the biological activities of BLV

```
A.  -471          G AATTCGAGCT GCCCCTTATC CAAACGCCCG GCCTGTCTTG   -431
    -430  GTCTGTCCCC GCGATCGACC TATTCCTAAC CGGTCCCCCT TCCCCATACG   -381
    -380  ACCGGTTACA CGTGTGGTCC AGTCCTAAGG CCTTACAACG CTTCCTCCAT   -331
                  Z DNA
    -330  GACCCTACGC TCACCTGGTC AGAATTGGTT GCTAGCGGGA AACTAAGACT   -281
                                                  1
    -280  TGATTCACCC TTAAAATTAC AGCTGTTAGA AAATGAATGG CTCTCCCGCC   -231
                          5'LTR
    -230  TTTTTTGAGG GGGAGTCATT TGTATGAAAG ATCATGCAGG CCTAGCGCCG   -181
                PBS+     IR        2  E      Z DNA        3
    -180  CCACCGCCCC GTAAACCAGA CAGAGACGTC AGCTGCCAGA GAAGCTGCTG   -131
                3        2          4          4
    -130  ACGGCAGCTG GTGGTCAGAA TCCCCGTACC TCCCCAACTT CCCCTTTCCC   -81
                        5          5
     -80  GAAAAATCCA CACCCTGAGC TGCTGACCTC ACCTGCTGAT AAATTAATAA   -31
                                      U3 5'CAP
     -30  AATGCCGGCC CTGTCGAGTT AGCGGCACCA GAAGCGTTCT CCTCCTGAGA    20
      21  CCCTAGTGCT CAGCTCTCGG TCCTGAGCTC TCTTGCTCCC GAGACCTTCT    70
      71  GGTCGGCTAT CCGGCAGCGG TCAGGTAAGG CAAACCACGG TTTGGAGGGT   120
     121  GGTTCTCGGC TGAGACCGCC GCGAGCTCTA TCTCCGGTCC TCTGACCGTC   170
     171  TCCACGTGGA CTCTCTCTCT TGCCTCCTGA CCCCGCGCTC CAAGGGCGTC   220
     221  TGGCTTGCAC CCGCGTTTGT TTCCTGTCTT ACTTTCTGTT TCTCGCGGCC   270
                      LH                                3'LTR
     271  CGCGCTCTCT CCCTCGGCGC CCTCTAGCGG CCAGGAGAGA CCGGCAAACA   320
          CELL        L'H                                IR
     321  ACAAAGCACT GGACATGACT TAGAGACTGA ACAACAACCA TCTTGAGGTG   370
     371  GCAGGTGGGC AGGTTTATAA GAAGCACATT GGTTTGAATT C            411

                                  45
B:          TGCAGGGGGGGGGGGGAGCTCTCTTGCTCCCGAGACCTT......
                                  5'LTR 321
     ......GCGGCCAGGAGAGACCGGCAAACAATTGGGGGCTCGTCCGGGATT
                                  IR          PBS-
```

FIG. 3 Nucleotide sequence of the integrated BLV 3'LTR with adjacent viral and cellular DNA in tumour DNA fragment T15–4 (A) and partial nucleotide sequence of the 5'LTR (B). The sequence of the + strand (same sense as viral RNA) is presented.

Position 1 in the sequence corresponds to the 5'end of the RNA genome, the capping site (vertical arrow). Important features of the sequence are: IR, inverted repeat; Z DNA, zone of Z DNA; E, enhancer core sequence; U_3, unique sequence derived from the 3'end of genomic RNA; PBS^+, plus strand binding site, PBS^-, tRNA ^{pro} binding site; LH and L'H, RU_5 locally homologous regions to U_3 regions of SSV-LTR. The probable Hogness and CAT sequences are shown in boxes. Two inverted (labelled 1 and 2) and 3 direct incomplete repeats have been overlined, the arrows indicating the reading direction. In these repeats, bases that are at variance have been marked. It has been suggested to us (W. Haseltine, personal communication) that base A at position 320 could be the 3'end of U_5 and that TG at position −305 could be the 5'end of U_3. In this hypothesis, the sequence GCAAACA (nucleotides 314 to 320) is the inversed match of TGGTTGC (nucleotides −305 to −298). The polypurine tract would then be GGTCAGAA (nucleotides −341 to −306). In this case, BLV LTR would be 625 nucleotides long.

only those recognizing epitopes F, G and H were shown to be able to compete with sera of BLV-infected cattle for gp51 binding (Bruck *et al.*, Leukaemia Research, submitted for publication). Monoclonals against the 5 other gp51 epitopes do not appear to have functional homologues in the sera of BLV-infected cattle (Fig. 2).

Epitopes F, G and H are precisely those recognized by neutralizing antibodies to both virus infectivity and syncytia formation and, at least one of them, epitope G, is also a target for cytolytic antibodies (Bruck, Portetelle, Burny & Zavada, 1982b).

Since persistent antibodies to BLV proteins is a constant and early feature of BLV infection in experimental and natural situations, serological surveys of cattle populations is the best method for early detection of field BLV infection. Early detection of BLV infection is important for both the control of spread of the disease and

the establishment of an efficient eradication policy. Numerous methods have been developed for the detection of antibodies specific to BLV in the sera of BLV-infected cattle or sheep, including agar gel immunodiffusion, liquid phase or solid phase radio-immunoassay and enzyme-linked immunosorbent assays (reviewed by Burny *et al.*, 1980). A variant of classical enzyme-linked immunosorbent assays has been developed recently that yields a highly sensitive, practical, rapid and cheap method for the detection of BLV gp51 antibodies (Portetelle, Bruck, Mammerickx & Burny, 1983). Pools of up to 75 sera can be analysed. The sensitivity of the test is such that a single antibody carrier can be detected under these conditions (Mammerickx *et al.*, submitted for publication).

BLV Genome and Gene Products

Production of BLV in tissue culture

Since the original discovery of BLV in the supernatant of short term cultures of PL lymphocytes (Miller *et al.*, 1969), several long term cultures producing BLV have been obtained. These include cell-lines derived from explanted tumour tissues (Ferrer, Stock & Lin, 1971; Mamoun, Astiers & Guillemain, 1981) or various epithelioid and fibroblastoid cell lines infected with BLV after co-culture with BLV-infected bovine lymphoid cells (Van der Maaten *et al.*, 1974; Van der Maaten & Miller, 1976b; Graves & Ferrer, 1976). Most of the data about the structure and biosynthesis of BLV components have been obtained from the FLK-BLV producing cell-line of Van der Maaten & Miller (1976). This cell-line is the best available producer of infectious BLV particles. Restriction enzyme analysis indicates that it contains four BLV proviruses (Casey & Nicolson, 1982). Each of these proviruses has been molecularly cloned and only one of them proved to be infectious in subsequent transfection experiments.

BLV genome

Denaturation of the 60–70S BLV virion RNA yielded poly (A)-containing subunits that sedimented at 38S and migrated as single components of molecular mass 2,95 $\times$ 10^6 (*ca.* 8,8 kb) in SDS polyacrylamide gels (Ghysdael, Kettmann & Burny, 1979). This value is in good agreement with the 8,3–9,4 kb values reported for unintegrated BLV DNA from various sources (Kettmann *et al.*, 1981; Kashmiri, Mehdi & Ferrer, 1983) and for BLV proviruses cloned either from a bovine tumour (Deschamps, Kettmann & Burny, 1981) or the FLK-BLV producer cell-line (Casey & Nicolson, 1982).

From the nucleotide sequence of the 3′-LTR and portion of the 5′-LTR of a BLV provirus cloned from a bovine tumour (Coues, Deschamps, Kettmann, Stephens, Gilden & Burny, 1984) and the nucleotide sequence of cDNA complementary to the 3′ end of BLV viral RNA (Tsimanis, Bichko, Dreilina, Meldrais, Lozha, Kukaine & Gren, 1983) (Fig. 3), it appears that:

(i) in agreement with the reported size of BLV strong stop cDNA (Seiki, Hattori & Yoshida, 1982), the RU_5 moiety of the viral RNA is 321 nucleotides long, thus leaving about 215 nucleotides for the U_3 region of the RNA. The R region is unusually long (234 nucleotides; to be compared to the R region of HTLV-LTR which is 228 nucleotides long);

(ii) sequences possibly involved in the regulation of the promoter function of proviral LTR are localized 38 nucleotides ('TAT' box) and 92 nucleotides ('CAT' box) upstream from the mRNA 'cap' site (first nucleotide of R);

(iii) a stretch of 18 nucleotides, immediately downstream from U_5, is identical with the tRNA/Pro binding site of other mammalian retroviruses, suggesting that tRNA/Pro is used as primer for the synthesis of (-) DNA strand by reverse transcriptase (PBS-).

(iv) a stretch of 9 purine residues is present immediately upstream from U_3; it may represent a binding site for the primer of (+) DNA strand synthesis by reverse transcriptase (PBS^+).

The coding capacity of the viral genome includes at least the 4 internal structural proteins (p24, p15, p12, p10), reverse transcriptase and 2 envelope glycoproteins (gp51 and gp30). Based on functional (Ghysdael, Kettmann & Burny, 1978; 1979) and structural (R. Gilden, personal communication) analyses, it appears that the gene order along the BLV genome is 5′-gag-pol-env-3′, similar to that of other replication competent lymphoid leukaemia viruses. It is not clear at present whether additional proteins are encoded by the viral genome. Along these lines it should be noted that *in vitro* translation of 3′-derived 16-18S subgenomic fragments of the BLV 38S RNA yielded a 18 000 molecular mass protein unrelated by peptide analysis to the products of the *gag, pol* and *env* genes (Ghysdael *et al.*, 1979). It remains to be seen, however, whether this product is synthesized in infected cells or is merely an *in vitro* translation artefact.

BLV proteins

Analysis of purified BLV virions by SDS polyacrylamide gel electrophoresis and gel filtration in the presence of guanidine hydrochloride resolved 4 major non-glycosylated proteins (p24, p15, p12, p10) and 2 glycosylated components (gp51 and gp30) (reviewed by Burny *et al.*, 1980).

Internal structural proteins

p24 was the first recognized BLV structural protein (Miller & Olson, 1972). It has been purified to homogeneity and extensively characterized (Gilden *et al.*, 1975; Devare *et al.*, 1976; McDonald & Ferrer, 1976; Portetelle, Mammerickx, Bex, Burny, Cleuter, Dekegel, Ghysdael, Kettmann & Chantrenne, 1977). It is a neutral and moderately hydrophobic protein and has been partially sequenced (Oroszlan, Copeland, Henderson, Stephenson & Gilden, 1979). Although BLV p24 was shown to share the aminoterminal proline and carboxyterminal leucine of the p30 of all mammalian retroviruses, in agreement with previous immunochemical analyses, it was found to be chemically distinct from the major core protein of other retroviruses. However, statistically significant sequence homology was found between BLV p24 and the major p24 core protein of human T cell leukaemia virus (HTLV) (Oroszlan, Sarngadharan, Copeland, Kalynaraman, Gilden & Gallo, 1982). Monoclonal antibodies to BLV p24 have recently been obtained that identify 2 distinct antigenic sites on purified p24 (Bruck, C., unpublished). Antibodies to these opitopes are present in the sera from BLV infected animals.

p15 is a slightly basic protein (Kaaden, Frenzel, Dietzschold, Weiland & Mussgay, 1977) that lacks methionine residues. It is the major phosphoprotein of BLV virions (Uckert & Wunderlich, 1979) and chemical cross-linking experiments indicate that 2 populations of p15 molecules exist, one linked to the lipid bilayer of the viral membrane and the other linked to viral RNA (Uckert, Wunderlich, Ghysdael, Portetelle & Burny, 1984).

p12 is a basic protein with a high content of glycine and proline residues and thus a probable low level of secondary structure. Chemical cross-linking experiments

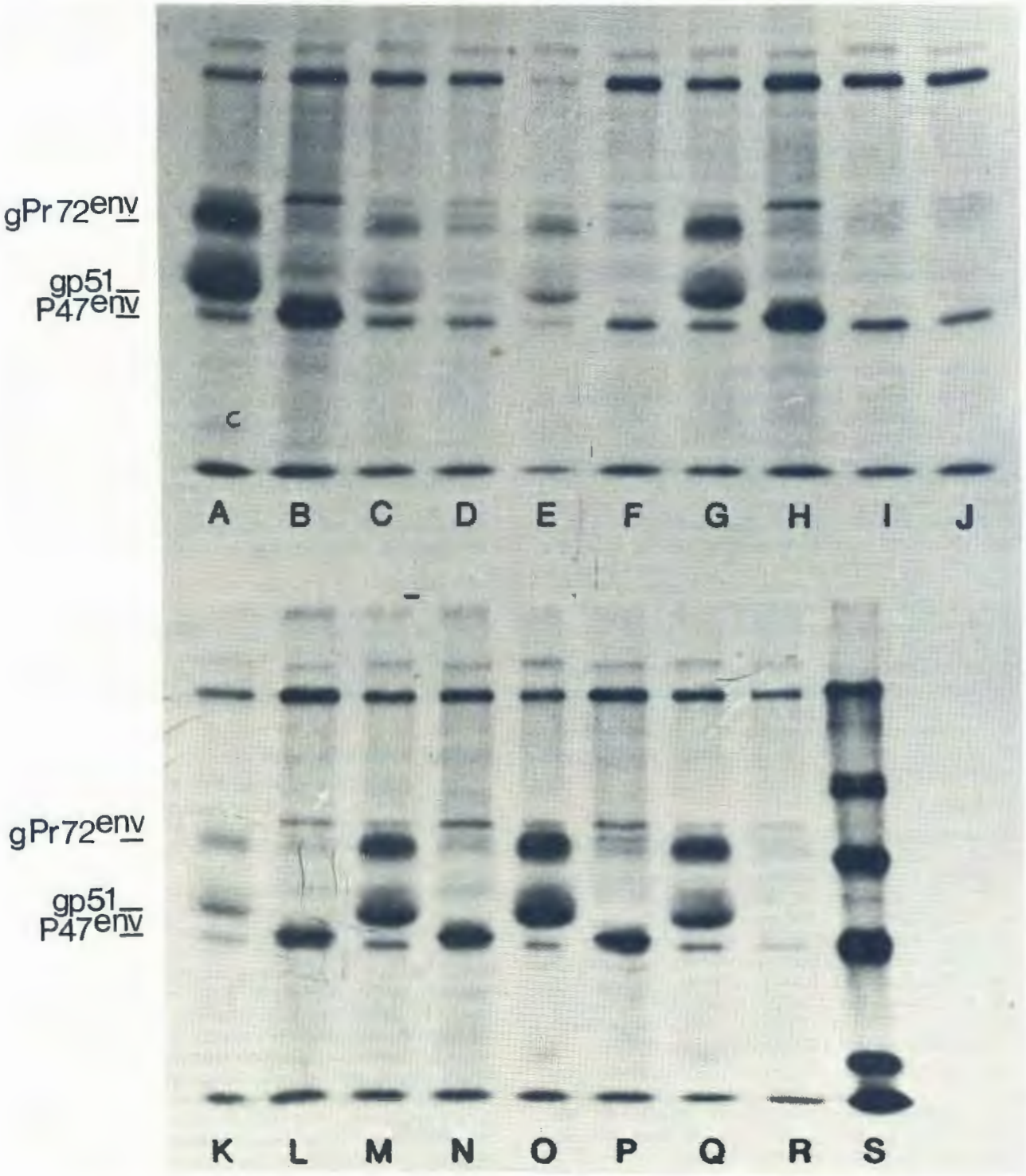

FIG. 4 Fluorogramme of SDS polyacrylamide gel of immunoprecipitates of FLK cell lysates obtained with monoclonal anti-gp51 antibodies.

FLK/BLV cells are labelled for 2 hours as described in Fig. 1, then lysed and immunoprecipitated with different mouse monoclonal anti-gp51 antibodies as described in Materials and Methods. Immunoprecipitated proteins are analysed on a 10 % polyacrylamide slab gel, followed by fluorography of the dried gel

Lane A: untreated FLK cells, monoclonal antibody GA2, directed against gp51 site B
Lane B: tunicamycin-treated FLK cells, monoclonal antibody GA2 directed against site B
Lane C: As A, monoclonal antibody GA3, site H
Lane D: As B, monoclonal antibody GA4, site H
Lane E: As A, monoclonal antibody GA4, site F
Lane F: As B, monoclonal antibody GA4, site F
Lane G: As A, monoclonal antibody GA5, site D
Lane H: As B, monoclonal antibody GA5, site D
Lane I: As A, monoclonal antibody anti tobacco mosaic virus
Lane J: As B, monoclonal antibody anti tobacco mosaic virus
Lane K: As A, monoclonal antibody GA7, site E
Lane L: As B, monoclonal antibody GA7, site E
Lane M: As A, monoclonal antibody GB8, site C
Lane N: As B, monoclonal antibody GB8, site C
Lane O: As A, monoclonal antibody GB9, site A
Lane P: As B, monoclonal antibody GB9, site A
Lane Q: As A, monoclonal antibody BC14, site G
Lane R: As B, monoclonal antibody BC14, site G
Lane S: molecular mass markers

have shown p12 to be in close proximity to viral RNA in BLS particles (Uckert *et al.*, 1984). Comparison of the p12 protein sequence with that derived from the partial nucleotide sequence of the *gag* gene of the cloned tumour provirus, localized p12 at the carboxyterminus of the primary translation product of *gag* (R. Gilden, personal communication). These experiments also point to minimal variation (1 amino-acid difference) between the p12 sequence of the two BLV isolates. This minimal genetic drift among independent isolates further supports the significance of the homology detected between BLV p12 and HTLV p12 (Oroszlan, personal communication).

p10 appears to be a highly basic protein able to bind to single stranded DNA (Long, Henderson & Oroszlan, 1980).

Intracellular precursors to BLV virion proteins have been detected by immuno-precipitation with sera of defined specificity of extracts of both BLV-infected cells (Ghysdael *et al.*, 1978; Mamoun, Astier, Guillemain & Duplan, 1983) and *X. laevis* oocytes micro-injected with BLV 38S RNA (Ghysdael *et al.*, 1979). In all cases, 2 polypeptides of molecular mass 70 000 (Pr 70^{gag}) and 45 000 (Pr 45^{gag}) were found to be precursors to p24, p15, p12 and p10. The relationship between Pr 70^{gag} and Pr 45^{gag} is unclear since, although the methionine-containing peptides of Pr 45^{gag} were all contained in Pr 70^{gag}, it appears unlikely that Pr 45^{gag} derived from Pr 70^{gag} by proteolytic cleavage since, (i) the Pr 70^{gag}/Pr 45^{gag} ratio in infected cells was found to be the same, irrespective of the pulse labelling time used, (ii) the Pr 70^{gag}/Pr 45^{gag} ratio was unaffected by labelling the cells in the presence of amino-acid analogs known to inhibit further proteolytic cleavages and (iii) both Pr 70^{gag} and Pr 45^{gag} are synthesized in reticulocyte lysate programmed with BLV 38S at a ratio similar to that found in BLV infected cells (Ghysdael *et al.*, 1978; 1979 and unpublished results).

Available evidence thus appears to indicate that Pr 70^{gag} and Pr 45^{gag} are synthesized independently, possibly on differently spliced 38S mRNA populations.

Reverse transcriptase

Size estimate for the RNA-dependent DNA polymerizing activity of BLV virions by glycerol gradient sedimentation varied from 70 000 to 45 000, depending on the salt concentration used (Burny, Bex, Bruck, Cleuter, Dekegel, Ghysdael, Kettmann, Leclercq, Mammerickx & Portetelle, 1978b; Drescher, Rössler, Venker & Wittmann, 1979). The RNA-dependent DNA polymerizing activity was found to be strictly dependent on RNA and all 4 deoxyribonucleoside tri-phosphates and, irrespective of the template-primer used, displayed a strong preference for Mg^{++} over Mn^{++} (Gilden, Long, Hanson, Toni, Charman, Oroszlan, Miller & Van der Maaten, 1975; Kettmann, Portetelle, Mammerickx, Cleuter, Dekegal, Galoux, Ghysdael, Burny & Chantrenne, 1976; Graves, Diglio & Ferrer, 1977). Evidence of the existence of RNaseH or other endonuclease activities associated with BLV reverse transcriptase has not been investigated. A possible precursor to BLV reverse transcriptase is a 145 000 molecular mass product, detected in BLV-infected cells and in heterologous protein synthesizing systems programmed with BLV 38S as an elongation product of Pr 70^{gag} (Ghysdael *et al.*, 1978; 1979).

Envelope glycoprotein

The major envelope glycoproteins of BLV particles, gp51 and gp30, have been shown to be associated as a 1:1 complex by disulfide bonds in viral particles isolated under non-reducing conditions (reviewed by Burny *et al.*, 1978). Immunoprecipitation experiments, using a monospecific antiserum to BLV envelope glycoproteins, indicate that both gp30 and gp51 derive from a glycosylated 72 000 molecular mass precursor gPr 72^{env} (Ghysdael *et al.*, 1978; Mamoun *et al.*, 1983). Treatment of FLK-BLV cells with tunicamycin, an inhibitor of the first step in the pathway of the synthesis of the oligosaccharide moiety of asparagine-linked glycoprotein, has been used to determine the size of the apoprotein of gPr 72^{env} as a 48 000 dalton component (J. Ghysdael & C. Bruck, unpublished results). Monoclonal antibodies to BLV gp51 have been obtained in the mouse, using either non-disrupted BLV particles or purified gp51 as immunogens (Bruck *et al.*, 1982a). By competition antibody binding assays, these antibodies were shown to identify 8 independent antigenic sites (epitopes) on the gp51 molecule (sites A through H, Bruck *et al.*, 1982a; and Fig. 2). Three of these 8 antigenic sites, namely, F, G, H, were shown to be involved in determining both virus infectivity and syncytia formation by BLV producing cells, whereas at least site G appeared to be a target for antibody-mediated complement-dependent cytotoxicity (Bruck *et al.*, 1982b). Limited proteolytic digestion of gp51 with urolinase and immunoprecipitation studies with the different monoclonal antibodies showed that antigenic sites F, G, H, together with site E, are part of a 15 000 molecular mass hypoglycosylated fragment of gp51 (Bruck *et al.*, 1982b).

However, integrity of the F, G and H antigenic sites appears to be determined by the integrity of a carbohydrate moiety, since (i) removal of most of the carbohydrate chains of gp 51 by treatment with a mixture of glycosidases specifically abolished the reactivity of the protein with sera of infected cattle and sheep (Portetelle, *et al.*, 1980; Schmerr, Miller & Van der Maaten, 1981); (ii) the non-glycosylated 48 000 molecular mass protein moiety of the precursor to gp51 synthesized after tunicamycin treatment of FLK-BLV cells, although recognized by monoclonal antibodies to antigenic sites A–E, is not immunoprecipitable by monoclonal antibodies to epitopes F, G and H (C. Bruck & J. Ghysdael, unpublished results).

Relatedness of BLV to other retroviruses

Nucleic acid hybridization experiments as well as competition radio-immunoassays have failed to detect any homology between BLV and FeLV, R-MuLV, MMTV, AMV, BaEV, WoLV and MPMV, nor to murine and porcine endogenous viruses (Kawakami, Morre, Theilen & Munn, 1970; Kettmann *et al.*, 1976; McDonald & Ferrer, 1976; Devare *et al.* 1977).

However, as was mentioned in the preceding section, partial sequence analysis of BLV p24 revealed statistically significant but distant homology to the major core protein of other mammalian viruses (Oroszlan *et al.*, 1979). More extensive homology was reported to the major p24 core protein of HTLV-1, a human retrovirus associated with adult T-cell lymphomas (Poiesz, Ruscetti, Gazdar, Bunn, Minna & Gallo, 1980; Poiesz, Ruscetti, Reitz, Kalyanaraman & Gallo, 1981; Hinuma, Nagata, Hanaoka, Nakai, Matsumoto, Kinoshita, Shirawa & Miyoshi, 1981).

Even more important homology was found between the amino-acid sequences of BLV and HTLV-1 p12's (Oroszlan, personal communication), detectable in competition radio-immunoassays (Oroszlan *et al.*, 1982).

Whether the evolutionary relationship between the *gag* genes of BLV and HTLV can be extended to other viral genes is not known yet. Complete nucleotide sequence of the BLV LTR has been obtained recently (Couez *et al.*, 1984) and no homology was found to the

sequences of the LTRs of other retroviruses, including HTLV-1. By various techniques of molecular hybridization, BLV genetic information has been found to be totally exogenous to the genome of all vertebrate species tested (Kettmann *et al.*, 1976; Callahan, Lieber, Todaro, Graves & Ferrer, 1976; Kettmann *et al.*, 1978; Deschamps *et al.*, 1981). Completion of the total nucleotide sequence of the BLV genome should allow the search for discrete regions of homology to cellular DNA sequences and possibly shed light on the evolutionary origin of the virus.

Molecular Aspects of BLV-Induced Leukaemogenesis

A considerable amount of experimental data has accumulated which contribute towards our understanding of BLV-induced leukaemia at the molecular level. As was mentioned in the previous section, the use of probes specific for the BLV genome in hybridization analyses of cellular DNAs provided evidence for the exogenous character of BLV genetic information to the DNA of all vertebrate species tested. Final proof was obtained in experiments in which a probe derived from a molecularly cloned BLV provirus isolated from a BLV-induced tumour harbouring a single provirus was used (Deschamps, Kettmann & Burny, 1981). These results are of importance for determining the possible origin of BLV, but also demonstrate that BLV genetic information does not include any *onc* gene since all retroviral *onc* genes are cell-derived, phylogenetically conserved, transformation-specific inserts in the genome of acutely transforming viruses (reviewed by Coffin, Varmus, Bishop, Essex, Hardy, Martin, Rosenberg, Scolnick, Weinberg & Vogt, 1982).

Liquid hybridization and Southern blot analyses, using BLV-genome specific probes, show that all BLV-induced tumours and most of the cells in individual tumours contain proviral genetic information, thus demonstrating the indispensable presence of the virus for tumor development (Kettman *et al.*, 1980; Kettmann, Westin, Marbaix, Deschamps, Wong-Staal, Gallo & Burny, 1983). Furthermore, individual tumours are clonal for the site of provirus integration, a situation in sharp contrast to the polyclonality observed in lymphocytes of either BLV-infected animals or of animals in PL (Kettmann *et al.*, 1980). Also, unlike BLV-infected lymphocytes of animals in PL, tumour lymphocytes display abnormalities in their chromosomal ploidy, although no constant pattern can be detected (Hare *et al.*, 1967). These observations point to a multi-step process for tumour development, the presence of the BLV provirus being a necessary but, by itself, an insufficient event.

Recent experiments have evaluated the role of BLV proviral information in the development and/or maintenance of the tumour state. BLV-induced tumours contain at least one, or a portion of one provirus and, when they occur, deletions seem to affect the 5′ half (but possibly not the 5′-LTR) of the provirus (Kettmann *et al.*, 1980). Whether the apparent generalized conservation of 3′ proviral sequences is of functional importance at a particular stage of disease development is at present unknown. Irrespective of the method used (liquid or dot blot hybridization of poly $(A)^+$ RNA from independent tumours), transcription of BLV proviral DNA, including LTR sequences, was not detected (Marbaix *et al.*, 1981; Kettmann *et al.*, 1982). This indicates that maintenance of the tumour state does not require (i) continuous expression of BLV genetic information and, (ii) continuous LTR-mediated promotion of transcription into cellular sequences 3′ to the provirus, a mechanism known to be operative in the activation of c-*myc* transcription in most LTV-induced avian lymphomas (Hayward, Neel & Astrin, 1981).

It should be noted that these experiments have not addressed the question as to the role in tumours of LTR-mediated enhancement of transcription from cellular promoters either 3′ or 5′ to the provirus or of LTR-mediated mRNA stabilization (e.g. by polyadenylation), mechanisms that are probably also involved in c-*myc* activation in some LLV-induced avian lymphomas (Payne, Bishop & Varmus, 1981).

The possibility that integration of the BLV provirus results in an inhibitory effect on the transcription of nearby cellular genes also remains untested. If any of these hypothetical mechanisms is operative in the deregulation of transcription of cellular genes important to the control of growth and/or differentiation, all imply as corollary the integration of at least one BLV provirus in a limited number of domains in the cellular DNA of independent tumours. The existence of preferential integration sites for BLV proviruses in tumour cell DNAs has been investigated (Kettmann *et al.*, 1982; Kettmann, Deschamps, Couez, Claustriaux, Palm & Burny, 1983). The 3′-end host-virus junction fragments of 3 independent BLV-induced tumours, each containing a single provirus, have been molecularly cloned. The cell-derived moieties of these clones were used as probes to define large restriction fragments in normal cellular DNA corresponding to the cellular domains surrounding these proviruses in the original tumours. No rearrangement of these cellular loci, due to the insertion of a BLV provirus, was found in 28 other BLV-induced tumours. Furthermore, analysis of hamster-bovine cell hybrids (Heuertz & Hors-Cayla, 1981) indicate that the cellular sequences used as probes in these experiments belong to different chromosomes in normal bovine cells (Grégoire, Couez, Deschamps, Heuertz, Hors-Cayla, Szpirer, Szpirer, Burny, Huez & Kettmann, 1984). In conclusion, experimental results have failed so far to demonstrate a preferential integration site for BLV proviruses in tumours. It appears that, to be preferential, the domain must be very large. Similar analysis, using additional host-virus junction fragments, will be necessary to reinforce this point. To summarize, these results, although confirming definitively the role of BLV in tumour induction, have not pointed yet to the function of the BLV provirus or proviral information in this process.

Along these lines, EcoRI analysis of a panel of 10 tumour DNAs has failed to demonstrate rearrangements of the cellular homologues of several retroviral *onc* genes including c-*myc*, c-*myb*, c-*erbA*, c-*erbB*, c-*abl*; c-*src*, c-*rasH*, c-*fes* and c-*sis* (Kettman *et al.*, 1983). Also, transfection of high molecular mass DNA of most BLV-induced tumours into NIH 3T3 cells fails to induce foci of transformed cells (J. Ghysdael & C. J. Marshall, unpublished results).

It should be mentioned, however, that all reported experiments involve only the tumour phase of the disease of cattle. As we discussed in Section 2, in experimental conditions BLV is highly oncogenic for sheep where it appears to induce sometimes at least a T cell lymphoma. Furthermore, as tumours in general, and leukaemia in particular, appear to be multistep processes, it may well be that the mandatory functional role of BLV in lymphoma development occurs at a stage preceeding the clonal expansion of tumour cells. These questions are clearly to be approached in future experiments.

Epidemiolgy and Transmission of BLV

In a former extensive review by Burny *et al.* (1980), the use of highly sensitive serological tests for the detection of BLV infection demonstrated the virus to be dis-

tributed worldwide, although striking zones of prevalence are evident (e.g Eastern Europe, North and South America). Little information is available about BLV distribution in African and, apart from Japan, Asian countries.

Generally speaking, transmission of retroviruses to susceptible animal species can occur horizontally, congenitally or genetically. Since BLV genetic information is totally exogenous to its natural host, vertical genetic transmission can be excluded as a mode of propagation of this virus. Vertical congenital transmission of BLV from infected dams to their progeny occurs occasionally in natural conditions; congenital transmission from infected sires to progeny has never been reported (reviewed by Burny *et al.*, 1980).

Horizontal transmission is undoubtedly the most important form of BLV propagation both within a herd and between herds as the consequence of trade exchanges. Several observations (House & House, 1977; Maas-Inderwiesen, Albrecht, Bause, Osmers & Schmidt, 1978; Wilesmith, Straub & Lorenz, 1978) point to management and husbandry practices as important factors in the rate of dissemination of infection within a herd. Natural BLV transmission can also occur through milk and colostrum from infected animals, since experimental transmission to sheep is easily achieved using these secretions as inocula (Miller & Van der Maaten, 1978b; Straub, 1982; Kenyon, Gupta & Ferrer, 1982). Colostrum and milk transmission are very efficient if these secretions are contaminated by blood (Mammerickx, 1972a; 1972b). In relation to the potential hazard of BLV to human beings, it should be noted that pasteurization of infected milk totally destroys infectious viral particles (Baumgartener, Olson & Onuma, 1976). Several species of blood-sucking insects could act as BLV vectors (Bech-Nielsen, Piper & Ferrer, 1978; Kaaden *et al.*, 1982). Although this mode of propagation is probably of minor importance in temperate climates, it could be more important under tropical conditions where non-bovine species, such as zebu, water buffaloes and capybaras, appear as possible BLV reservoirs (Marin, De Lopez, De Alvarez, Castanos, Espana, Leon & Bello, 1982).

Eradication and Prevention of BLV Infection

Control of the spread of BLV infection is desirable for 2 main reasons. The first and obvious reason is economical. Although in most cases BLV infrequently induces tumours and the death of infected animals, in some situations and for reasons that are essentially unclear, high tumour rates have been observed (Yoshikawa, Yoshikawa & Takeuchi, 1972; Marin, Lopez, Lazano, Palencia, Espana, Castanos & Leon, 1978). Especially in these situations, since the extent of tumour development is directly linked to the extent of virus spread, uncontrolled infection can lead to important economic losses. The 2nd reason is the potential hazard of BLV to human health. It should be stressed here that no evidence for a risk to human health associated with BLV has been obtained so far (reviewed by Van der Maaten & Miller, 1977). However, evidence exists for BLV transmission to heterologous species and genera in natural conditions (Marin *et al.*, 1982). Also, sequence homology exists between the genetic information of BLV and that of the only characterized human retroviruses, HTLV. Theoretically, genetic recombination events between the 2 viruses are possible.

These reasons have justified the search for eradication methods of BLV infection. Countries of the European Economic Community have declared enzootic bovine leukosis to be a legal disease. In those countries where moderate to high rates of BLV infection are observed, successful eradication programmes have been established. In such programmes, all animals of a herd are serially tested at intervals of 3–6 months for antibodies to BLV gp51. Seropositive animals are eliminated once detected and the whole herd is retested until it is free of reactors (Mammerickx, Cormann, Burny, Dekegel & Portetelle, 1978; Straub, 1978; Burki, 1982; De Vries, 1982; Schmidt; 1982).

For countries where BLV infection is endemic (American and Eastern European countries), although similar programmes involving the identification of calves as BLV-free are possible (Ferrer, 1982), they pose management problems and probably will prove difficult to carry out in practice.

In these countries in particular, but in all countries in general, the ideal solution towards control of BLV infection and elimination of enzootic bovine leukosis would be the use of an effective BLV vaccine. Since antibodies to BLV gp51 are neutralizing *in vitro* to both virus infectivity and release and include subclasses with cytolytic activity (see Chapter 4), a vaccine resulting in the production of antibodies to gp51 should be protective to virus infection and spread.

Preliminary experiments, using as vaccine either chemically inactivated BLV (Miller & Van der Maaten, 1978a; Miller, Van der Maaten & Schmerr, 1983), fixed FLK cells or purified gp51 (Onuma, Hodatsu, Yamamoto, Higashihara, Masu, Mikami & Izawa, 1984), clearly indicate that humoral antibody response to gp51 is effective in short term protection to BLV infection. Three antigenic sites that are part of the 15 000 dalton fragment of the gp51 molecule (sites, F, G, H) have been shown to be involved in virus infectivity (Bruck *et al.*, 1982b). Since at least one of these sites appears to be conserved in all BLV isolates tested so far (C. Bruck, unpublished data), these sites might serve as the basis of a synthetic BLV vaccine. Obvious possibilities are the insertion of the region of the BLV *env* gene corresponding to these sites into suitable plasmid expression vectors, including yeast expression vector, since glycosylation appears to be important to the biological activity of sites F–H. Alternatively, from the nucleotide sequence of the BLV *env* gene, synthetic peptides corresponding to various portions of the amino-acid sequence of gp51, including antigenic sites F–H, can be tested as potential vaccines after coupling to an adequate protein carrier.

Of practical importance is the fact that the use of gp51-based vaccines would simplify the distinction under field conditions between vaccinated animals and BLV-infected animals, the latter synthesizing antibodies not only to gp51 but also to other BLV structural proteins.

An alternative to gp51 vaccination has been proposed recently (Theilen, Miller, Higgings, Ruppaner & Garret, 1982). These authors made use of vaccination of cattle with live cells from a cell-line, BL-3, established from the bone marrow and thymus of a sporadic case of bovine leukosis. Although injected animals had no antibodies to BLV structural proteins, protection against virus infection was evident. The nature of the antigen(s) of BL-3 conferring protection to vaccinated animals has been proposed to be tumour-associated transplantation antigen(s) (Theilen *et al.*, 1982).

In conclusion, preliminary experimental evidence has pointed to several avenues for the development of an effective BLV vaccine, making the production of such a vaccine undoubtedly foreseeable in the next decade. Its use should achieve world-wide eradication of BLV infection and enzootic bovine leukosis.

REFERENCES

ANDERSON, L. J., JARRETT, W. F. H. & CRIGHTON, G. W., 1968. A classification of lymphoid neoplasms of domestic animals. *National Cancer Institute Monograph*, 32, 343–353.

BALIGA, V. & FERRER, J., 1977. Expression of the bovine leukaemia virus and its internal antigen in blood lymphocytes. *Proceedings of the Society for Experimental Biology and Medicine*, 156, 388–391.

BAUMGARTENER, L. E. & OLSON, C., 1982. Host range of bovine leukosis virus: Preliminary report. *Current Topics in Veterinary Medicine and Animal Research*, 15, 338–347.

BAUMGARTENER, L., OLSON, C. & ONUMA, M., 1976. Effect of pasteurization and heat treatment on bovine leukaemia virus. *Journal of the American Veterinary Medical Association*, 169, 1189–1191.

BECK-NIELSEN, S., PIPER, C. E. & FERRER, J. F., 1978. Natural mode of transmission of the bovine leukaemia virus: role of blood-sucking insects. *Journal of the American Veterinary Medical Association*, 39, 1089–1092.

BENTON, C. V., SORIA, A. E. & GILDEN, R. V., 1978. Direct syncytial assay for the quantitation of bovine leukaemia virus. *Infection and Immunity*, 20, 307–309.

BRUCK, C., MATHOT, S., PORTETELLE, D., BERTE, C., FRANSSEN, J. D., HERION, P. & BURNY, A., 1982a. Monoclonal antibodies define eight independent antigenic regions on the bovine leukaemia virus (BLV) envelope glycoprotein gp51. *Virology*, 122, 343–352.

BRUCK, C., PORTETELLE, D., BURNY, A. & ZAVADA, J., 1982b. Topographical analysis by monoclonal antibodies of BLV gp51 epitopes involved in viral functions. *Virology*, 122, 353–362.

BURKI, F., 1982. Experiences and progress achieved with BLV elimination from Austrian livestock. *Current Topics in Veterinary Medicine and Animal Research*, 15, 516–527.

BURNY, A., BEX, F., CHANTRENNE, H., CLEUTER, Y., DEKEGEL, D., GHYSDAEL, J., KETTMANN, R., LECLERCQ, M., LEUNEN, J., MAMMERICKX, M. & PORTETELLE, D., 1978a. Bovine leukaemia virus involvement in enzootic bovine leukosis. *Advanced Cancer Research*, 28, 251–311.

BURNY, A., BEX, F., BRUCK, C., CLEUTER, Y., DEKEGEL, D., GHYSDAEL, J., KETTMANN, R., LECLERCQ, M., MAMMERICKX, M. & PORTETELLE, D., 1978b. Biochemical studies on enzootic and sporadic types of bovine leukosis. *In*: Antiviral mechanisms in the control of neoplasia. pp. 83–99, P. CHANDRA (ed.), N.Y.: Plenum Press.

BURNY, A., BRUCK, C., CHANTRENNE, H., CLEUTER, Y., DEKEGEL, D., GHYSDAEL, L., KETTMANN, R., LECLERCQ, M., LEUNEN, J., MAMMERICKX, M. & PORTETELLE, D., 1980. Bovine leukaemia virus: Molecular biology and epidemiology. *In:* KLEIN, G. (ed.) Viral Oncology. pp. 231–289. New York: Raven Press.

BURRIDGE, M. J., THURMOND, M. C., PHUR, D. M., WILCOX, C. J. & SIMERL, N. A., 1982. Preliminary studies on impact of bovine leukaemia virus infection on dairy productivity. *Current Topics in Veterinary Medicine and Animal Science*, 15, 599–603.

CALLAHAN, R., LIEBER, M. M., TODARO, C. J., GRAVES, D. C. & FERRER, J. F., 1976. Bovine leukaemia virus genes in the DNA of leukaemia cattle. *Science*, 192, 1005–1007.

CASEY, J. W. & NICOLSON, M. O., 1982. Susceptibility to productive infection by the bovine leukaemia virus is governed at the proviral level. *Federation Proceedings*, 41 (3), 1275.

COFFIN, J. M., VARMUS, H. E., BISHOP, J. M., ESSEX, M., HARDY, W. D., MARTIN, G. S., ROSENBERG, N. E., SCOLNICK, E. M., WEINBERG, R. A. & VOGT, P. K., 1982. Proposal for naming host cell-derived inserts in retrovirus genomes. *Journal of Virology*, 40, 953-957.

CORNEFERT-JENSEN, F., HARE, W. C. & STOCK, N. D., 1969. Studies on bovine lymphosarcoma. Formation of syncytia and detection of virus particles in mixed cell cultures. *International Journal of Cancer*, 4, 507–519.

COUEZ, D., DESCHAMPS, J., KETTMANN, R., STEPHENS, R., GILDEN, R. V. & BURNY, A., 1984. Nucleotide sequence analysis of the long terminal repeat of integrated bovine leukaemia proviral DNA and of adjacent viral and host sequences. *Journal of Virology*, 49, 615–620.

DESCHAMPS, J., KETTMANN, R. & BURNY, A., 1981. Experiments with cloned complete tumour-derived bovine leukaemia virus information prove that the virus is totally exogenous to its target animal species. *Journal of Virology*, 40, 605–609.

DEVARE, S. G., CHANDER, S., SAMAGH, B. S. & STEPHENSON, J. R., 1977. Evaluation of radioimmunoprecipitation for the detection of bovine leukaemia virus infection in domestic cattle. *Journal of Immunology*, 119, 277–282.

DE VRIES, G., 1982. Progress and problems in the eradication of EBL in the Netherlands. *Current Topics of Veterinary Medicine and Animal Science*, 15, 510–513.

DIGLIO, C. A. & FERRER, J. F., 1976. Induction of syncytia by the bovine C-type leukaemia virus. *Cancer Research*, 36, 1056–1067.

DRESCHER, B., RÖSSLER, H., VENKER, P. & WITTMANN, W., 1979. Purification and characterization of bovine leukaemia virus DNA polymerase. *Archiv für Geschwulstforschung*, 49, 569–579.

DRISCOLL, D. M. & OLSON, C., 1977. Bovine leukaemia virus associated antigens in lymphocyte cultures. *American Journal of Veterinary Research*, 38, 1897–1898.

FERRER, J. F. & DIGLIO, C. A., 1976. Development of an *in vitro* infectivity assay for the C-type bovine leukaemia virus. *Cancer Research*, 36, 1068–1073.

FERRER, J. F., PIPER, C. E. & BALIGA, V., 1977. Diagnosis of BLV infection in cattle of various ages. *In:* A. BURNY (ed.). Bovine leucosis: Various methods of molecular virology, pp. 326–336. Commission of European Communities, Luxembourg.

FERRER, J. F., STOCK, N. D. & LIN, P. S., 1971. Detection of replicating C-type viruses in continuous cell cultures established from cows with leukaemia: effect of the culture medium. *Journal of the National Cancer Institute*, 47, 613–621.

FERRER, J. F., 1982. Eradication of bovine leukaemia virus infection from a high prevalence herd using a radioimmune assay for identification of infected animals. *Journal of the American Veterinary Medical Association*, 82, 890–893.

FUJIMOTO, Y., MILLER, J. & OLSON, C., 1969. The fine structure of lymphosarcoma in cattle. *Pathologia Veterinaria*, 6, 15–29.

GERARD-MARCHAND, R., HAMLIN, I., LENNERT, K., RILKE, F., STANFELD, A. G. & VAN UNNIK, J. A. M., 1974. Classification of non-Hodgkin's lymphomas. *Lancet*, ii, 406–408.

GILDEN, R. V., LONG, C. W., HANSON, M., TONI, R., CHARMAN, H.P., OROSZLAN, S., MILLER, J. M. & VAN DER MAATEN, M. J., 1975. Characteristics of the major internal protein and DNA-dependent DNA polymerase of bovine leukaemia virus. *Journal of General Virology*, 29, 305–314.

GHYSDAEL, J., KETTMANN, R. & BURNY, A., 1978. Translation of bovine leukaemia virus genome information in heterologous protein synthesizing systems programmed with virion RNA and in cell-lines persistently infected by BLV. *Annales de Recherces Vétérinaires*, 9, 627–634.

GHYSDAEL, J., KETTMANN, R. & BURNY, A., 1979. Translation of BLV virion RNAs in heterologous protein synthesizing systems. *Journal of Virology*, 29, 1087–1098.

GRAVES, D. C. & FERRER, J. F., 1976. *In vitro* transmission and propagation of the bovine leukaemia virus in monolayer cell cultures. *Cancer Research*, 36, 4152–4159.

GRAVES, D. C., DIGLIO, C. A. & FERRER, J. F., 1977. A reverse transcriptase assay for detection of bovine leukaemia virus. *American Journal of Veterinary Research*, 38, 1739–1744.

GRAVES, D. C. & JONES, L. V., 1981. Early syncytium formation by bovine leukaemia virus. *Journal of Virology*, 38, 1055–1063.

GRÉGOIRE, D., COUEZ, D., DESCHAMPS, J., HEUERTZ, S., HORS-CAYLA, M. C., SZPIRER, J., SZPIRER, C., BURNY, A., HUEZ, G. & KETTMANN, R., 1984. Different bovine leukaemia virus-induced tumours harbour the provirus in different chromosomes. *Journal of Virology*, 50, 275–279.

GUILLEMAIN, B., MAMOUN, R., LEVY, D., IRGENS, K., ASTIER, T. & PARODI, A. L., 1977. A quantitative study of early polykaryocytosis in mixed cultures of bovine leukaemia virus infected ovine cells and mouse sarcoma virus infected cat cells. *In:* BURNY, A. (ed.). Bovine leucosis: various methods of molecular virology. Commission of the European Communities, Luxembourg, 347–356.

GUPTA, P. & FERRER, J. F., 1982. Expression of bovine leukaemia virus genome is blocked by a non-immunoglobulin protein in plasma from infected cattle. *Science*, 215, 405–407.

HARE, W. C. D., YANG, T. J. & McFEELY, R.A., 1967. A survey of chromosome findings in 47 cases of bovine lymphosarcoma (Leukaemia). *Journal of the National Cancer Istitute*, 38, 383–387.

HAYWARD, W. S., NEEL, B. G. & ASTRIN, S. M., 1981. Activation of a cellular *onc* gene by promotor insertion in ALV-induced lymphoid leukosis. *Nature*, 290, 475–480.

HEUERTZ, S. & HORS-CAYLA, M. C., 1981. Cattle gene mapping by somatic cell hybridization study of 17 enzyme markers. *Cytogenetic Cell Genet.*, 30, 137–145.

HINUMA, Y., NAGATA, K., HANAOKA, M., NAKAI, N., MATSUMOTO, T., KINOSHITA, K., SHIRAWA, S. & MIYOSHI, I., 1981. Adult T-cell leukaemia: antigen in an ATL cell-line and detection of antibodies to the antigen in human sera. *Proceedings of the National Academy of Science*, 78, 6476–6480.

HORVATH, Z., 1982. Experimental transmission of bovine leukosis to sheep (Clinicopathological considerations). *Current Topics on Veterinary Medicine and Animal Science*, 15, 269–281.

HOUSE, J. A. & HOUSE, C., 1977. Studies on the bovine leukaemia glycoprotein immunodiffusion test. *In:* BURNY, A. (ed.) Bovine leucosis: various methods of molecular virology. pp. 237–246. Commission of European Committees, Luxembourg.

HUBER, N. L., DIGIACOMA, R. F., EVERMANN, J. F. & STUDER, E., 1981. Bovine leukaemia virus infection in a large Holstein herd: prospective comparison of production and reproductive performance in antibody-negative and antibody-positive cows. *American Journal of Veterinary Research*, 42, 1477–1481.

IRGENS, K., PINELLI, C., GUILEMAIN, B., LEVY, D. & PARODI, A. L., 1977. Early syncytia formation induced by BLV producing cells in mixed cultures. *In:* BURNY, A. (ed.). Bovine leucosis: various methods of molecular virology. Commission of the European Communities, Luxembourg, 311–322.

JARRETT, W. F. H. & MACKEY, L. J., 1974. *Bulletin of the World Health Organisation*, 50. 1–142.

KAADEN, O. R., FISCHER, W., MEERMAN, A. & LIEBISCH, A., 1982. Transmission of BLV by *Ixodes ricinus* ticks. Current *Topics on Veterinary Medicine and Animal Science*, 15, 358–360.

KAADEN, O. R., FRENZEL, B., DIETZSCHOLD, B., WEILAND, F. & MUSSGAY, M., 1977. Isolation of a p15 polypeptide from bovine leukaemia virus and detection of specific antibodies in leukaemic cattle. *Virology*, 77, 501–509.

KASHMIRI, S. V. S., MEHDI, R. & FERRER, J. F., 1983. Detection, purification and characterization of two species of covalently closed circular proviral DNA molecules of bovine leukaemia virus *Journal of Virology*, 45, 1172–1176.

KAWAKAMI, T. G., MORRE, A. L., THEILEN, G. H. & MUNN, R. J., 1970. Comparison of virus-like particles from leukotic cattle to feline leukosis virus. *Bibliography of Haematology*, 36, 471–475.

KENYON, S. J. & PIPER, C. E., 1977. Properties of density gradient-fractionated peripheral blood leukocytes from cattle infected with bovine leukaemia virus. *Infection and Immunity*, 16, 898–903.

KENYON, S. J., GUPTA, P. & FERRER, J. F., 1982. Presence of the bovine leukaemia virus (BLV) in milk of naturally infected cows. *Current Topics on Veterinary Medicine and Animal Science*, 15, 289–297.

KETTMANN, R., BURNY, A., CLEUTER, Y., GHYSDAEL, J. & MAMMERICKX, M., 1978. Distribution of bovine leukaemia virus proviral DNA sequences in tissues of animals with enzootic bovine leucosis. *Leukemia Research*, 2, 23–32.

KETTMANN, R., CLEUTER, Y., MAMMERICKX, M., MEUNIER-ROTIVAL, M., BERNARDI, G., BURNY, A. & CHANTRENNE, H., 1980. Genomic integration of bovine leukaemia provirus: Comparison of persistent lymphocytosis with lymph node tumour form of enzootic bovine leukosis. *Proceedings of the National Academy of Science*, 77, 2577–2581.

KETTMANN, R., COUEZ, D. & BURNY, A., 1981. Restriction endoclease mapping of linear unintegrated proviral DNA of bovine leukaemia virus. *Journal of Virology*, 38, 27–28.

KETTMANN, R., DESCHAMPS, J., CLEUTER, Y., COUEZ, D., BURNY, A. & MARBAIX, G., 1982. Leukomogenesis by bovine leukaemia virus: Proviral DNA integration and lack of RNA expression of viral long terminal repeat and 3′ proximate cellular sequences. *Proceedings of the National Academy of Science*, 79, 2465–2469.

KETTMANN, R., DESCHAMPS, J., COUEZ, D., CLAUSTRIAUX, J. J., PALM, R. & BURNY, A., 1983. Chromosome integration domain for bovine leukaemia provirus in tumours. *Journal of Virology*, 47, 146–150.

KETTMANN, R., MARBAIX, G., CLEUTER, Y., PORTETELLE, D., MAMMERICKX, M. & BURNY, A., 1980. Genomic integration of bovine leukaemia provirus and lack of viral RNA expression in the target cells of cattle with different responses to BLV infection. *Leukemia Research*, 4, 509–519.

KETTMANN, R., PORTETELLE, D., MAMMERICKX, M., CLEUTER, Y., DEKEGEL, D., GALOUX, M., GHYSDAEL, J., BURNY, A. & CHANTRENNE, H., 1976. Bovine leukemia virus: an exogenous RNA oncogenic virus. *Proceedings of the National Academy of Science*, 73, 1014–1018.

KETTMANN, R., WESTIN, E. H., MARBAIX, G., DESCHAMPS, J., WONGSTAAL, F., GALLO, R. C. & BURNY, A., 1983. Lack of expression of cellular homologues of retroviral *onc* genes in bovine tumours. *Modern Trends in Human Leukemia*. NETH, V. R. *et al.* (eds). pp. 218–221. Berlin: Springer-Verlag.

KUMAR, S. P., PAUL, P. S., POMEROY, K. A., JOHNSON, D. W., MUSCOPLAT, C. C., VAN DER MAATEN, M. J., MILLER, J. M. & SORENSEN, D. K., 1978. Frequency of lymphocytes bearing Fc receptors and surface immunoglobulins in normal persistent lymphocytotic and leukemic cows. *American Journal of Veterinary Research*, 39, 45–49.

LANGSTON, A., FERDINAND, G. A., RUPPANNER, R., THEILEN, G. H., DRLICA, S. & BEHYMER, D., 1978. Comparison of production variables of bovine leukemia virus antibody-negative and antibody-positive cows in two California dairy herds. *American Journal of Veterinary Research*, 39, 1093–1098.

LENNERT, K., STEIN, H. & KASSERLING, E., 1975. Cytological and functional criteria for the classification of malignant lymphomas. *British Journal of Cancer*, 31, supplement II, 29–43.

LONG, C. W., HENDERSON, L. E. & OROSZLAN, S., 1980. Isolation and characterization of low molecular-weight DNA binding proteins from retroviruses. *Virology*, 104, 491–496.

MAAS-INDERWIESEN, F., ALBRECHT, A., BAUSE, I., OSMERS, M. & SCHMIDT, F. W., 1978, Zum Einfluss der Leukosebekämpfung auf die Entwicklung der enzootischen Rinderleukose in Niedersachsen. *Deutsche Tieraerztliche Wochenschrift*, 85, 309–314.

MAMMERICKX, M., 1972a. Étude épizootologique sur les leucoses des animaux en Belgique de 1961 à 1970. *Annales de Médicine Vétérinaire*, 116, 157–166.

MAMMERICKX, M., 1972b. La transmission verticale et horizontale de la leucose bovine enzootique. Premiers résultats après cinq ans d'expérimentation. *Annales de Médicine Vétérinaire*, 116, 647–659.

MAMMERICKX, M., 1973. L'examen nécropsique des bovides leucémiques. *Annales de Médicine Vétérinaire*, 117, 93–102.

MAMMERICKX, M., CORMANN, A., BURNY, A., DEKEGEL, D. & PORTETELLE, D., 1978. Eradication of enzootic bovine leukosis based on the detection of the disease by the gp51 immunodiffusion test. *Annales de Recherches Vétérinaires*, 9, 885–894.

MAMMERICKX, M., PORTETELLE, D. & BURNY, A., 1981. Experimental cross-transmissions of bovine leukemia virus (BLV) between several animal species. *Zentralblatt Veterinaermedizin*, (B), 28, 69–81.

MAMOUN, R. Z., ASTIERS, T. & GUILLEMAIN, B., 1981. Establishment and propagation of a bovine leukemia virus-producing cell-line derived from the leukocytes of a leukemic cow. *Journal of General Virology*, 54, 357–365.

MAMOUN, R., ASTIER, T., GUILLEMAIN, B. & DUPLAN, J. F., 1983. Bovine lymphosarcoma: expression of BLV-related proteins in cultured cells. *Journal of General Virology*, 64, 1895–1905.

MARBAIX, G., KETTMANN, R., CLEUTER, Y. BURNY, A., 1981. Viral RNA content of bovine leukemia virus-infected cells. *Molecular Biology Report*, 7, 135–138.

MARIN, C., LOPEZ, N., LOZANO, O., PALENCIA, L., ESPANA, W., CASTANOS, H. & LEON, H., 1978. Epidemiology of bovine leukemia in Venezuela. *Annales de Recherches Vétérinaires*, 9, 743–746.

MARIN, C., DE LOPEZ, N., DE ALVAREZ, M., CASTANOS, H., ESPANA, W., LEON, A. & BELLO, A., 1982. Humoral spontaneous response to bovine leukaemia virus infection in zebu, sheep, buffalo and capybara. *Current Topics in Veterinary Medicine and Animal Science*, 15, 310–320.

MCDONALD, H. C. & FERRER, J. F., 1976. Detection, quantitation and characterization of major internal virion antigen of the bovine leukemia virus by radio-immunoassay. *Journal of the National Cancer Institute*, 57, 875–882.

MILLER, J. M., MILLER, L. D., OLSON, C. & GILLETTE, K. G., 1969. Virus-like particles in phytohaemagglutinin-stimulated lymphocyte culture with reference to bovine lymphosarcoma. *Journal of the National Cancer Institute*, 43, 1297–1305.

MILLER, J. M. & OLSON, C., 1972. Precipitating antibody to an internal antigen of the C-type virus associated with bovine lymphosarcoma. *Journal of the National Cancer Institute*, 49, 1459–1462.

MILLER, J. M. & VAN DER MAATEN, M. J., 1978a. Evaluation of an inactivated bovine leukemia virus preparation as an immunogen in cattle. *Annales de Recherches Vétérinaires*, 9, 871–877.

MILLER, J. M. & VAN DER MAATEN, M. J., 1978b. Infectivity tests of secretions and excretions from cattle infected by bovine leukemia virus. *Journal of the National Cancer Institute*, 62, 425–428.

MILLER, J. M., VAN DER MAATEN, M. J. & SCHMERR, M. J., 1983. Vaccination of cattle with binary ethylenimine-treated bovine leukemia virus. *American Journal of Veterinary Research*, 44, 64–67.

MUSCOPLAT, C., JOHNSON, D. W., POMEROY, K. A., OLSON, J. M., LARSON, V. L., STEVENS, J. B. & SORENSEN, D. K., 1974. Lymphocyte surface immunoglobulin: frequency in normal and lymphocytic cattle. *American Journal of Veterinary Research*, 35, 593–595.

OGURA, H., PAULSEN, J. & BAUER, H., 1977. Cross neutralization of ovine and bovine C-type leukemia virus-induced syncytia formation. *Cancer Research*, 37, 1486–1489.

OLSON, C., KETTMANN, R., BURNY, A. & KAJA, R., 1981.

Goat lymphosarcoma from bovine leukemia virus. *Journal of the National Cancer Institute*, 67, 671–675.

ONUMA, M., HODATSU, T., YAMAMOTO, S., HIGASHIHARA, M., MASU, S., MIKAMI, T. & IZAWA, H., 1984. Protection by vaccination against bovine leukemia virus infection in sheep. *American Journal of Veterinary Research*, 45, 1212–1215.

ONUMA, M., HONMA, T., MIKAMI, T., ICHIJO, S. & KONISHI, T., 1979. Studies on the sporadic and enzootic forms of bovine leukosis. *Journal of Comparative Pathology*, 89, 159–167.

OROSZLAN, S., COPELAND, T. D., HENDERSON, L. E., STEPHENSON, J. R. & GILDEN, R. V., 1979. Amino-terminal sequence of bovine leukemia virus major internal protein: homology with mammalian type-C virus p30 structural proteins. *Proceedings of the National Academy of Science*, 76, 2996–3000.

OROSZLAN, S., SARNGADHARAN, M. G., COPELAND, T. D., KALYANARAMAN, V. S., GILDEN, R. V. & GALLO, R. C., 1982. Primary structure analysis of the major internal protein p24 of human type-C T-cell leukemia virus *Proceedings of the National Academy of Science*, 79, 1291–1294.

PARODI, A. L., MIALOT, M., CRESPEAU, F., LEVY, D., SALMON, H., NOGUES, G. & GERARD-MARCHAND, R., 1982. Attempt for a new cytological and cytoimmunological classification of bovine malignant lymphoma (BML) (lymphosarcoma). *Current Topics in Veterinary Medicine and Animal Sciences*, 15, 561–572.

PAUL, P. S., POMEROY, K. A., CASTRO, A. E., JOHNSON, D. W., MUSCOPLAT, C. C. & SORENSEN, D. K., 1977a. Detection of bovine leukemia virus in B-lymphocytes by the syncytia induction assay. *Journal of the National Cancer Institute*, 59, 1269–1271.

PAUL, P. S., POMEROY, K. A., JOHNSON, D. W., MUSCOPLAT, C. C., HANDWERGER, B. S., SOPER, F. S. & SORENSEN, D. K., 1977b. Evidence for the replication of bovine leukemia virus in the B-lymphocytes. *American Journal of Veterinary Research*, 38, 873–876.

PAYNE, G. S., BISHOP, J. M. & VARMUS, H. E., 1981. Multiple arrangements of viral DNA and an activated host oncogene in bursal lymphomas. *Nature*, 295, 209–213.

POIESZ, B. J., RUSCETTI, F. W., GAZDAR, A. F., BUNN, P. A., MINNA, J. D. & GALLO, R. C., 1980. Detection and isolation of type-C retrovirus particles from fresh and cultured lymphocytes of a patient with cutaneous T-cell lymphoma. *Proceedings of the National Academy of Science*, 77, 7415–7419.

POIESZ, B. J., RUSCETTI, F. W., REITZ, M. S., KALYANARAMAN, V. S. & GALLO, R. C., 1981. Isolation of a new type-C retrovirus (HTLV) in primary uncultured cells of a patient with Sezary T-cell leukemia. *Nature*, 294, 268–271.

PORTETELLE, D., BRUCK, C., BURNY, A., DEKEGEL, D., MAMMERICKX, M. & URBAIN, J., 1978. Detection of complement-dependent lytic antibodies in sera from bovine leukemia virus-infected animals. *Annales de Recherches Vétérinaire*, 9, 667–674.

PORTETELLE, D., BRUCK, C., MAMMERICKX, M. & BURNY, A., 1980. In animals infected by bovine leukemia virus (BLV) antibodies to envelope glycoprotein gp51 are directed against the carbohydrate moiety. *Virology*, 105, 223–233.

PORTETELLE, D., BRUCK, C., MAMMERICKX, M. & BURNY, A., 1983. Use of monoclonal antibody in an ELISA test for the detection of antibodies to bovine leukaemia virus. *Journal of Virological Methods*, 6, 19–29.

PORTETELLE, D., MAMMERICKX, M., BEX, F., BURNY, A., CLEUTER, Y., DEKEGEL, D., GHYSDAEL, J., KETTMANN, R. & CHANTRENNE, H. 1977. Purification of BLV gp70 and BLV p24. Detection by radio-immunoassay of antibodies directed against these antigens. *In:* "Bovine leucosis: Various methods of molecular virology", A. BURNY (ed.), pp. 131–152. Committee of European Communities, Luxembourg.

RESSANG, A. A., MASTENBROEK. N., QUACK, J., VAN GRIENSVEN, L. J., CALAFAT, J., HILGERS, J., HAGEMAN, P., SOUISSI, T. & SWEN, S., 1974. Studies on bovine leukemia. I. Establishment of type-C virus producing cell lines. *Zentralblatt Veterinaermedizin*, (B) 21, 602–617.

SCHMERR, M. J., MILLER, J. M. & VAN DER MAATEN, M. J., 1981. Antigenic reactivity of a soluble glycoprotein associated with bovine leukemia virus. *Virology*, 109, 431–434.

SCHMIDT, F. W., 1982. Results and observations of an EBL eradication programme based on AGID diagnosis and culling of reactors. *Current Topics in Veterinary Medicine and Animal Science*, 15, 491–497.

SEIKI, M., HATTORI, S. & YOSHIDA, M., 1982. Human adult T-cell leukemia virus: molecular cloning of the provirus DNA and the unique terminal structures. *Proceedings of the National Academy of Science*, 79, 6899–6902.

SENTSUI, H., THORN, R. M. KONO, Y. & FERRER, J. F., 1982. Haemagglutination by bovine leukaemia virus. *Journal of General Virology*, 59, 83–89.

STOCK, N. D. & FERRER, J. F., 1972. Replicating C-type virus in phytohaemmagglutinin-treated buffy-coat cultures of bovine origin. *Journal of the National Cancer Institute*, 48, 985–996.

STRAUB, O. C., 1978. Preliminary results of a new sanitation program for the eradication of enzootic bovine leukosis. *Annales de Recherches Vétérinaires*, 9, 895–898.

STRAUB, O., 1982. Transmission studies from leukemic cattle to sheep using secretions, excretions, breath and skin scrapings. *Current Topics in Veterinary Science and Animal Science*, 15, 299–308.

TAKASHIMA, I., OLSON, C., DRISCOLL, D. M. & BAUMGARTENER, L. E., 1977. B- and T-lymphocytes in three types of bovine lymphosarcoma. *Journal of the National Cancer Institute*, 59, 1205–1209.

THEILEN, G. H., MILLER, J. M., HIGGINS, J., RUPPANER, R. N. & GARRETT, W., 1982. Vaccination against bovine leukemia virus infection. *Current Topics in Veterinary Medicine and Animal Science*, 15, 547–559.

TSIMANIS, A., BICHKO, V., DREILINA, D., MELDRAIS, J., LOZHA, V., KUKAINE, R. & GREN, E., 1983. The structure of cloned 3′ terminal RNA region of bovine leukemia virus (BLV). *Nucleic Acid Research*, 11, 6079–6087.

UCKERT, W. & WUNDERLICH, V., 1979. Proteins of bovine leukemia virus: p15 is the major phosphoprotein. *Acta Biologica et Medica Germanica*, Band 38, K42.

UCKERT, W. & WUNDERLICH, V., GHYSDAEL, J., PORTETELLE, D. & BURNY, A., 1984. Bovine leukemia virus (BLV)—structural model based on chemical cross-linking studies. *Virology*, (in press).

VAN DER MAATEN, M. J. & MILLER, J. M., 1976a. Serological evidence of transmission of bovine leukemia virus to chimpanzees. *Veterinary Microbiology*, 1, 351–357.

VAN DER MAATEN, M. J. & MILLER, J. M., 1976b. Replication of bovine leukemia virus in monolayer cell cultures. *Bibliography of Haematology*, 43, 360–362.

VAN DER MAATEN, M. J. & MILLER, J. M., 1977. *In*: Origins of human cancer, Cold Spring Harbor Lab., Ed., pp. 1223–1234, Cold Spring Harbor Laboratory, N.Y.

VAN DER MAATEN, M. J., MILLER, J. M. & BOOTHE, A. D., 1974. Replicating type-C virus particles in monolayer cell cultures of tissue from cattle with lymphosarcoma. *Journal of the National Cancer Institute*, 52, 491–494.

WEILAND, F. & STRAUB, O. C., 1975. Frequency of surface immunoglobulin bearing blood lymphocytes in cattle affected with bovine leukosis. *Research in Veterinary Science*, 19, 100–102.

WILESMITH, J. W., STRAUB, O. C. & LORENZ, R. J., 1978. Untersuchungen zur iatrogenen Uebertragung des Virus der Rinderleukose. *Tieraerztliche Umschau*, 33, 519–523.

WITTMANN, W. & URBANECK, D., 1969. Leukosen des Rindes. *In*: Handbuch der Virusinfektionen bei Tieren, Bd v/1, H. Röhren, (ed.) Gustav Fisher Verlag, Jena.

YOSHIKAWA, T., YOSHIKAWA, H. & TAKEUCHI, S., 1972. Bovine leukosis cluster in the Towada district of Japan. *Kitasato Archives of Experimental Medicine*, 45, 193–204.

ABBREVIATIONS

BLV, Bovine leukaemia virus; FeLV, Feline leukaemia virus; R-MuLV, Rauscher strain of murine leukaemia virus; MMTV, Mouse mammary tumour virus; ALV, Avian leukosis virus; AMV, Avian myeloblastosis virus (standard strain); BaEV, Baboon endogenous virus; WoLV, Woolly monkey leukaemia virus; MPMV, Mason-Pfizer monkey virus; HTLV, human T-cell leukaemia virus.

Printed by the Government Printer, Private Bag X85, Pretoria, 0001