Original Article

Corresponding Author:
Andreas Pyper, Transnet Engineering, 311 Solomon Mahlangu Drive, Durban, South Africa. 4001
Email: Andreas.Pyper@transnet.net

Evaluating a Distributed Regenerative Braking System for Freight Trains

Andreas Pyper

Centre for Asset Integrity Management, University of Pretoria and Transnet Engineering

P. Stephan Heyns

Centre for Asset Integrity Management, University of Pretoria, Pretoria, South Africa

Abstract

This paper presents an investigation on a distributed regenerative braking system (RBS) for freight trains. The system, which involves installing regenerative braking units on the bogies of freight rail wagons, is proposed in a patent by Transnet SOC Ltd. The system allows for numerous RBSs to be installed on a single freight train in a distributed manner, which collectively functions together to perform regenerative braking on the train to reduce the energy consumption of the train. The proposed system would, if implemented successfully, alleviate challenges and limitations with current RBSs on diesel-powered freight trains. The goal of the investigation is to determine whether the system is both technically- and economically feasible.

The proposed RBS is conceptualised in this study by first establishing the requirements of the system from in-service train data, followed by the development of the subsystems and major components based on existing technology. A physical system simulation model is subsequently developed to establish the energy savings performance of the system concepts for typical freight train routes. The results show that energy savings of between 10% and 24% can be realised. This demonstrates the technical feasibility of the proposed system.

Next, the proposed system and the candidate concepts are evaluated in economic terms by means of a cost-benefit analysis (CBA). The decision criteria calculated in the CBA provide unanimous results as to which of the candidate concepts are economically feasible. It is shown that four of the candidate concepts, all utilising the same transmission topology incorporating a CVT with different flywheel configurations, are economically feasible. It is therefore concluded that the results of the CBA indicated that the proposed distributed RBS for freight trains is economically feasible and could deliver favourable financial returns if pursued.

Keywords

Regenerative Braking System (RBS), Energy Storage System (ESS), Flywheel Energy Storage System FESS, Continuously-variable transmission (CVT), Cost-benefit analysis (CBA).

Introduction

The transport sector is one of the largest energy consumers in the world, making up at least 18% of the world's energy consumption (1). Of the four primary transportation modes (road, rail, maritime and air), rail is the most efficient and also offers the highest transportation capacity (2,3) This is largely due to the low rolling resistance because of the stiff steel-on-steel contact between the wheel and rail as well as the convoy formation of trains (4). Due to the increasing competitiveness of other modes of transport, as well as the increasing pressure to curb energy demand and environmental impact, it is important that technologies which show promise of improving the operational efficiency of railways are explored to ensure the competitiveness and sustainability of rail transport (4).

One of the most promising means of reducing the energy consumption of trains is the implementation of regenerative braking systems (RBS) or Kinetic Energy Recovery Systems (KERS). It is well understood that the energy generated during traditional braking operations of trains is dissipated in the form of heat and noise and that it would be beneficial to rather capture this energy for reuse. The railway sector is particularly well suited to regenerative braking systems as trains are highly utilized and have a well-defined duty cycle when compared to the automotive industry (4). The potential energy savings by these systems have been investigated extensively in the literature which showed that energy savings from 16% up to 40% are attainable depending on the train route, type and duty cycle (3–7).

One such system, a distributed RBS proposed in a patent held by Transnet SOC is the subject of investigation in this paper (8). The proposed system involves installing RBSs with on-board energy storage on the unpowered wagons of freight trains with the intention of alleviating some of the shortcomings and limitations of the traditional approach of the RBS being located at the prime mover. The goal of the investigation presented in this paper is to establish both the technical- and economic feasibility of the proposed distributed RBS with an on-board energy storage system (ESS) for freight trains. To accomplish this, in-service train data was evaluated to establish the energy savings potential, a distributed RBS was conceptualised and developed, the performance of the proposed RBS was evaluated by simulation, and finally a financial model was developed to perform a cost-benefit analysis (CBA).

Regenerative Braking in the Rail Industry

Regenerative Braking Systems in the Freight Rail Industry

The electricity generated by freight trains during instances of dynamic braking is traditionally dissipated by converting the electrical energy to heat energy through a bank of resistors on board the train, referred to as *rheostatic braking*. A regenerative braking system (RBS) would capture this electrical energy, rather than dissipate it to the environment, and utilise the captured energy to power the train again when needed. Although many different RBSs have been studied and in some cases implemented in the freight rail industry, relatively few have made it past the prototype phase to the point where it is adopted in operations. This is due to challenges which include the storage and utilization of the regenerated energy, limitations in terms of the train types to which these systems are suited to as well as the economic feasibility of these systems.

RBSs in the rail industry can be categorised into two broad types based on the energy storage system they utilise, namely wayside- and on-board energy storage systems (ESS). With wayside ESSs, the energy recovered during braking is not stored on the rolling stock but at a remote location. These systems are implemented on railway lines that are electrified by an overhead catenary- or third rail electrification system which provides a means to transport the energy away from the rolling stock.
The second RBS type utilizes an ESS located on-board the rail vehicle which accumulates the regenerated electricity during braking and releases the energy once required to provide motoring effort. These systems require no modification to external infrastructure. On-board ESSs also exhibit higher efficiencies than their wayside counterparts as line losses associated with the transfer of energy over distance is avoided (5). These systems can be utilised on both electrified rail lines as well as non-electrified lines where diesel traction is used. Although on-board RBSs show great potential for energy savings and would enable regenerative braking on all freight trains regardless of power source, engineers have struggled to make these systems technically and financially feasible.

A study into the requirements for a regenerative braking on-board ESS reveals the inherent difficulties with this application. Similar studies have been conducted, with differences in the train types considered and can be found in literature (4,7,9). The size and mass of an ESS is dependent on its energy capacity and power rating. The inherent problem with freight trains is the low ratio of powered vehicles to non-powered vehicles (4-10%), which means that a single locomotive performs regenerative braking for 10 to 25 freight wagons and would therefore require an ESS that can store the kinetic energy of up to 25 freight wagons. With the energy storage technologies available today (lithium batteries, supercapacitors and flywheels) meeting these energy storage requirements on a locomotive has been unsuccesful thus far.

Globally 50% of railway lines are electrified and about 70% of rail traction energy is provided from electricity grids. The freight rail industry however is more dependent on diesel-power than the passenger sector (1). The USA railways consume about 100 million

MWh of energy (93% diesel and 7% electricity) of which more than 95% is used for freight transportation (1). In the South African context, Transnet is one of the largest industrial energy consumers in South Africa and the company's primary energy sources are electricity (57%) and diesel (38%). Transnet's energy consumption for traction amounts to 2900 GWh of electrical energy and 2000 GWh of energy from fuel (more than 150 million litres of fuel) annually (10).

Although RBSs with wayside energy storage enables regenerative braking on freight trains powered by electric energy, there is at this stage significant limitations to implement regenerative braking on diesel powered trains. The need to address this portion of the freight rail industry is compounded by the high cost of diesel traction energy when compared to that of electrical energy as well as the global concern over the effect of greenhouse gas (GHG) emissions (11,12).

Distributed Regenerative Braking on Freight Trains

In 2015 a novel RBS was proposed in a patent by Transnet (8). The proposed system involves installing RBSs in the bogies of non-powered wagons of freight trains enabling regenerative braking on these wagons. The result is a decentralised RBS consisting of numerous units distributed throughout the length of a train, as opposed to the conventional approach of locating the RBSs on or at the prime mover of the train.

As there is no traction equipment installed in the bogies of freight wagons, significant space is available to install a RBS with a volume between 300 and 400 litres. As the system allows for up to four RBSs in each wagon (two per bogie), a freight train could be equipped with a few hundred of these systems. The large number of units installed on a train means that each individual ESS will be relatively small and will alleviate the need for a very large ESS installed on a single vehicle in the train. Another benefit of the system is that it can be installed on existing rail wagons and would not require replacement of rail fleets to incorporate regenerative braking. The large number of units also offers obvious mass production benefits.

The two main components of a RBS are the ESS and a power converter to control the transfer of energy between the vehicle and the ESS. Although the proposed system is not limited to a specific energy storage type, an evaluation of energy storage technologies showed that a flywheel ESS is well suited to the application, as the durability of flywheels results in low life cycle cost and requires infrequent maintenance. The energy storage time is also expected to be relatively short and therefore the self-discharge of flywheels is low enough to maintain a high overall efficiency. It should be noted that storage mechanisms such as chemical batteries or supercapacitors would allow for the powering of on-board electrical systems such as refrigeration systems which would be an additional benefit of the system.

System Definition and Conceptual Design

To evaluate the technical feasibility, the distributed RBS is developed to the point where the requirements and limitations of the system is incorporated and a feasible concept for the system is generated. To do this, the distributed RBS is analysed at four system levels namely 1) the train system as a whole, 2) a single freight wagon, 3) the RBS as a system and 4) component level of the RBS.

Train System Analysis

At the highest level, the train system as a whole is analysed to determine the energy characteristics of freight trains which will dictate the performance requirements of the RBS as well as quantify the potential energy savings. This is done by analysing data sets obtained from test coaches in freight trains on two representative freight routes during operation in South Africa. A MATLAB script was created to determine the motoring- and braking power requirement of the freight trains from the coupler force exerted by the locomotive consist to the rest of the train and the speed of the train. From this, the self-sufficiency (defined as the total braking energy required divided by the total motoring energy required) for each trip, is calculated and indicates the maximum potential energy savings. This was calculated as 41.8% and 78.5% for the two routes respectively as shown in Table 1.

Table 1. Freight Train Route Properties

Parameter	Train trip	
	1	2
Number of locomotives	5	4
Number of wagons	80	50
Route length (km)	720	640
Trip duration (h)	14	15
Motoring energy for trip (kWh)	38 396	15 063
Braking energy for trip (kWh)	16 050	11 824
Self-sufficiency	41.8%	78.5%

With the characteristics of the braking and motoring requirements known, an analysis is performed to determine how much of the available braking energy on each route can be captured by an ESS with a given capacity. A numerical simulation is performed based on a generic RBS topology incorporated into a freight train as illustrated in Figure 1. The numeric simulation accounts for the inefficiencies of the charging **(P_{C_ESS})** and discharging **(P_{DC_ESS})** of the ESS due to power conversion losses **(P_{L_PC})** as well as the

self-discharge losses **(P_{L_ESS})** to provide a better understanding of the potential energy savings by regenerative braking **(P_{B_RBS})** on the freight train routes. The simulation is time-based, which means that the sequence of braking and motoring cycles is taken into consideration. This is implemented through a MATLAB script that cycles through the mission profile (power curve) of the freight train routes and evaluates how much of the braking and motoring requirement can be supplied by the RBS. The RBS is defined by an energy storage capacity, a charging/discharging efficiency as well as a self-discharge model for the ESS. These characteristics are based on those found in the literature (5,7,13). The analysis predicts energy savings results of 18% to 34% as shown in Figure 2. Lastly, the Energy Returned on Energy Invested (EROI) measure which indicates the return efficiency of the RBS was calculated with results of between 65% and 75% obtained, the efficiency decreasing as the energy capacity increases due to higher self-discharge losses.

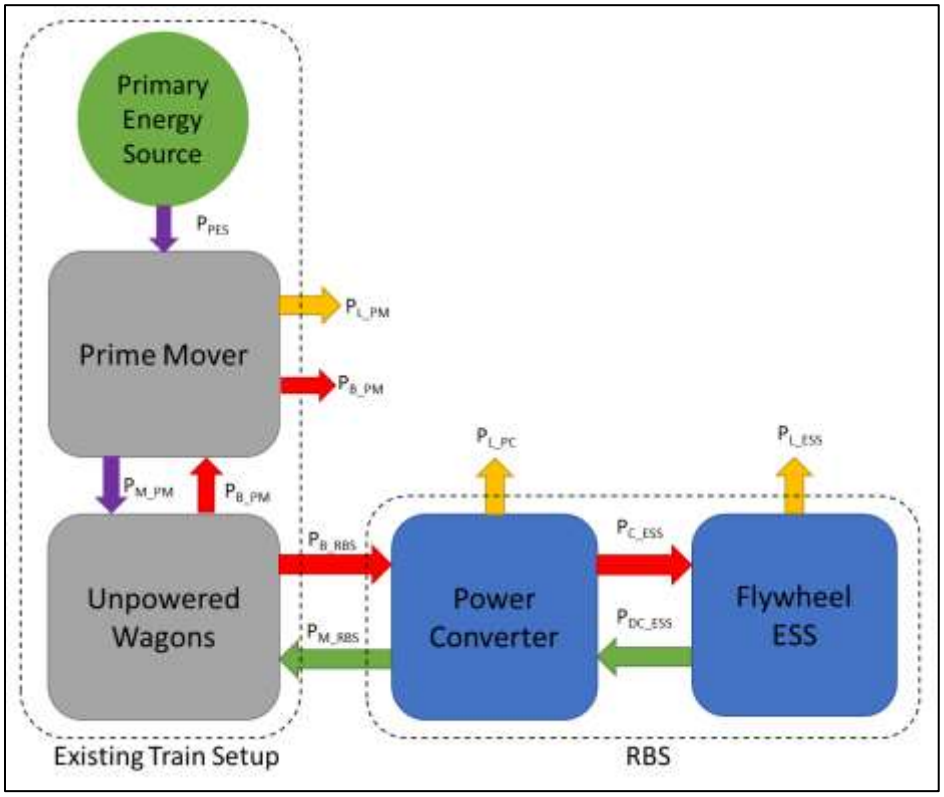

Figure 1. Generic RBS topology for numerical simulation.

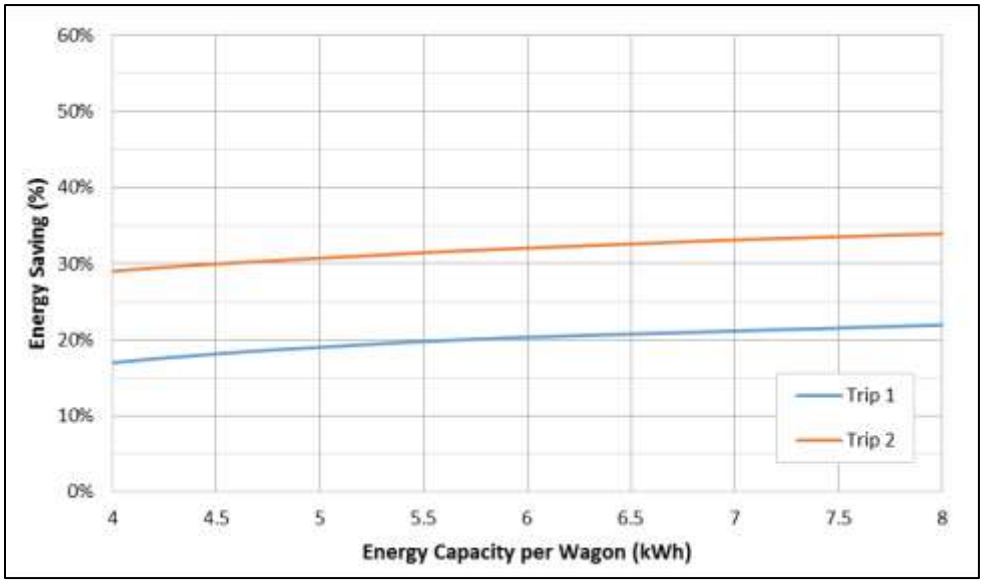

Figure 2. Percentage Energy Saved per Wagon for Trip 1 and 2

Regenerative Braking System Concept Definition

At the 2nd system level where the freight wagon is considered, it must be decided how many RBSs will be installed per freight wagon which will subsequently affect the performance requirements of each RBS. At the 3rd system level, the architecture of the RBS to be installed on the freight wagons must be defined. RBSs with flywheel energy storage have been adopted successfully in the automotive industry and for this reason applications in the automotive industry are considered to identify candidate system topologies. Due to the separation of the prime mover and RBS, the distributed RBS concept will inherently be a parallel hybrid system as both the prime mover and the secondary power source (the RBS) will be connected via final drives to the axles.

An extensive study on mechanical hybrid powertrains was performed by Berkel et al. (14). By adapting the topologies evaluated by Berkel et al. for the application of this study, two candidate topologies emerged as shown in Figure 3.

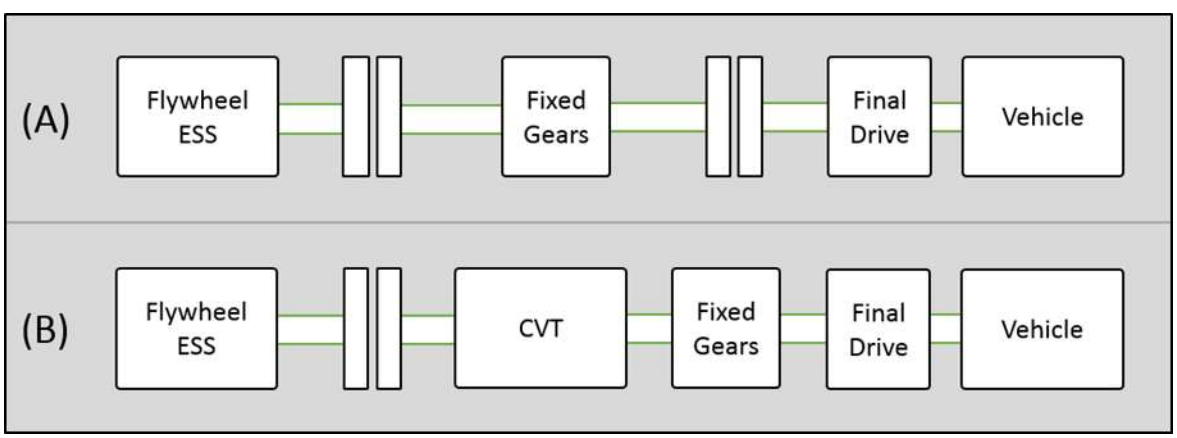

Figure 3. Adapted Hybrid Mechanical Topologies

The transmission components synchronise the speed of the flywheel to the speed of the wheel axle as well as facilitate the continuous change in speed of the flywheel to transmit torque to the vehicle axle. Topology A relies on two clutches to do so by varying the contact force between the clutch plates while there is a difference between the input and output shaft velocities. This type of system was also considered in the work of Read et al. (15). A set of fixed gears is present to compensate for the high flywheel rotational velocities compared to the vehicle axles. Clutches, acting as slipping components, have low efficiencies but can be implemented at a low cost and are therefore considered a competitive option. Although there is a clutch on either side of the fixed gears in this topology, only one of these clutches are required for the functionality of the RBS. The second clutch is present for improved heat distribution of the energy losses (14). Topology B utilises a controllable CVT to transmit the required torque to the wheel axle and flywheel. The CVT can transmit torque at much higher efficiencies than slipping components, but comes at an added cost. A clutch is still required in this topology to change the mode of operation. As for Topology A, a set of fixed gears are required to compensate for the high flywheel rotational velocity. Although the physical and three-dimensional design of the proposed system is beyond the scope of this study, a representation of a possible system configuration is shown in Figure 4. It is envisaged that methods already used for the integration and interfacing of traction equipment to motorised bogies in the rail industry (gear wheels, gear cases, suspension tubes etc.) be used for the distributed RBS. Based on this, the assumption is made that the inclusion of the RBS is technically feasible and dynamic effects of the component masses will not negatively affect the bogie performance beyond acceptable limits as is the case for existing motorised bogies.

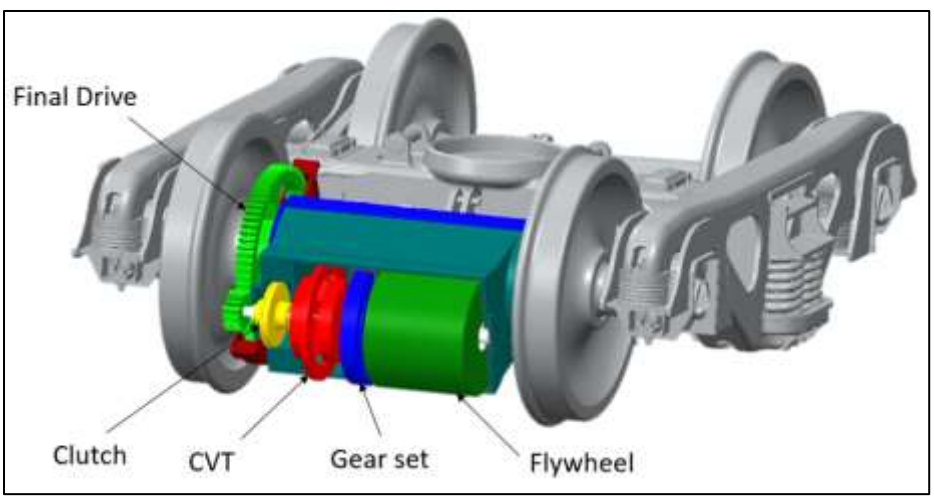

Figure 4. Physical Representation of a Bogie Integrated Regenerative Braking System

With the architecture of the RBS known, the system is investigated at the component level. The flywheel ESS determines the energy capacity of the system and it was shown above that this is one of the critical factors that determines the energy savings of the RBS. There are various objectives that a flywheel can be optimised for and for this study it was decided that the energy capacity will be maximised for the given design volume

with no explicit limit on the mass of the flywheel. It is also required that the self-discharge losses due to drag- and bearing losses be kept to a minimum.

A flywheel's energy content increases exponentially with an increase in flywheel rotational speed. It is therefore desirable to maximise the flywheel speed to maximise the energy density, and thereby the energy capacity, of the flywheel. This speed is limited however by the stress generated in the flywheel due to the centrifugal forces associated with high rotational velocities. An analysis is performed based on the mechanical properties of materials typically used in flywheel applications to determine the maximum rotational speed, mass, inertia and maximum energy capacity for a flywheel in our application. This is followed by an analysis to determine the self-discharge losses of the flywheels due to drag, bearing losses and losses associated with the vacuum system of the flywheel (16–18). The resulting flywheel characteristics are shown in Table 2. We see that the carbon and aramid flywheels have higher energy capacities than the steel flywheel as a result of their superior strength but suffer from higher self-discharge due to their much higher rotational speed.

Table 2. Candidate Flywheel Properties

Flywheel Parameter	Tool Steel	Carbon Epoxy	Aramid Epoxy
Usable Energy Capacity (kWh)	1.18	2.77	1.50
Mass (kg)	267	53.8	47.6
Maximum speed (rpm)	14 647	49 979	39 127
Total Power Loss (W)	624	3 521	2 097

The transmission is analysed to develop the gear ratios of the two candidate transmission topologies to meet the requirements of the candidate flywheels in terms of operating speed. The power and torque requirements at each of the transmission components must also be met. The gear ratios of the continuously variable transmission (CVT), fixed gears and final drives in both topologies contribute to the overall gear ratio of the transmission. As topology A has no variable gear ratio component, the transmission only has a single overall gear ratio made up of the final drive ratio and the ratio of the fixed gears. Topology B has a range of available ratios due to the CVT which is limited by the maximum and minimum CVT ratios. To determine these gear ratios, we analyse the required overall gear ratio of the transmission during operation. As the transmission gear ratio is influenced by the flywheel operating speed range, the gear ratio requirement varies for each flywheel and is established individually. The required transmission ratios are calculated for the maximum and minimum operational speed of the train and are shown in Figure 5. The shaded area, enclosed by the curves for the required gear ratio required for the minimum and maximum flywheel speeds, represents the required transmission ratio.

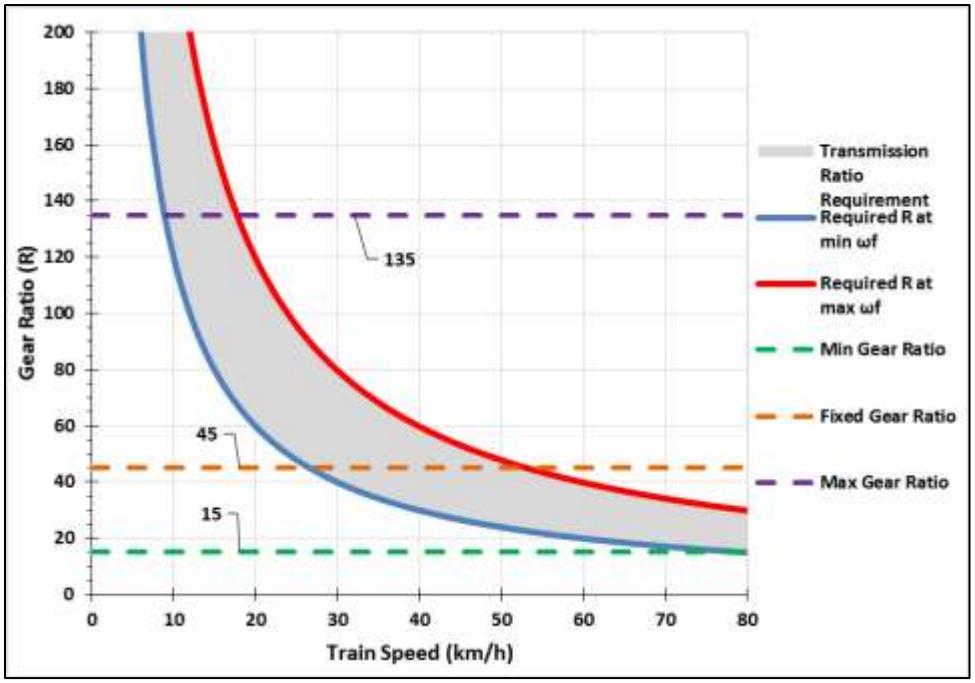

Figure 51. Topology B transmission gear ratio analysis for the Tool Steel flywheel

To meet the requirements stated above, the gear ratios for topology B for the steel flywheel were selected as shown in Figure 5. By selecting a fixed gear ratio (combination of final drive and fixed gears) of 45, a maximum- and minimum gear ratio of 135 and 15 can be achieved respectively with the incorporation of the CVT. As can be seen in the figure, this overall gear ratio selection allows for vertical movement between the maximum- and minimum flywheel speeds for train speeds of 18 km/h to 80 km/h. The vertical shift on the graph is made possible for this topology by a continuous increase or decrease in the ratio of the CVT. The analysis was repeated for the carbon and aramid flywheels. As topology A has no variable ratio component, the only way to affect an increase (or decrease) in the flywheel speed is when the input speed to the clutch on the wagon side is higher (or lower) than the input to the clutch on the flywheel side. When this is the case, engaging the clutch causes the flywheel speed to increase or decrease respectively. The implication of this is that a smaller operating train speed range can be accommodated by the RBS. With the candidate RBS topologies, flywheels and transmissions established, a concept matrix could be defined to illustrate the possible system configurations for further investigation.

Multi-Domain Physical System Simulation

A physical system simulation is performed next to evaluate the performance of the RBS concepts. The first outcome of the simulations is to verify that the proposed RBS concepts function in the expected manner. Further to this, the energy savings performance of the RBS concepts must be established. The last objective of the simulations is to optimize the gear ratio selection of the RBS concepts to achieve the best energy saving performance. A system simulation approach is chosen for this study as it allows for the modelling of the mechanical subsystems of the RBS at component level,

the interface with the rail vehicle as well as the control system of the RBS in a single model. The Siemens LMS Imagine-Lab Amesim software package (referred to as Amesim for here) was used to perform these system simulations. The primary objective, and performance measure of the distributed RBS is to reduce the energy consumption of the train and therefore the simulation process attempts to control the RBS in such a manner that energy savings are maximised. As for the numerical simulations performed previously, the simulation is performed at the level of a single rail wagon. The simulation boundary encompasses the RBSs and the wagon axle through which power is transferred to the train. The kinematics of the rail wagon is excluded from the simulation as the power requirement for the train routes are already available.

There are four main components to the simulation model. A RBS Hardware component contains all the physical components of the system which includes the flywheel, transmission (either of topology A or B) and the wagon axle. A controller contains the logic which generates control signals for the RBS hardware. The Mission Profile imports the in-service train data into the simulation model which serves as input to the Controller as well as the RBS Hardware. Lastly, the Post-processing component is used to extract and process certain variables and generate the performance parameters of the RBS. The integrated simulation model is shown in Figure 6.

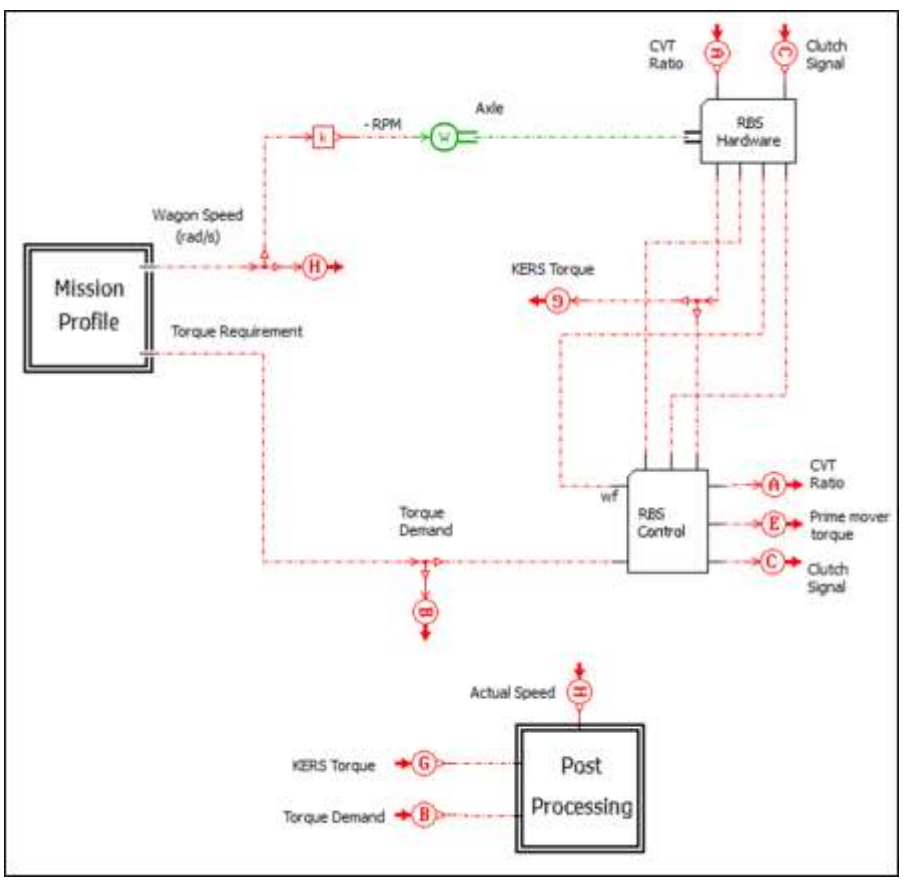

Figure 6. Integrated System Simulation Model

With the model setup complete and input parameters specified the simulations are performed and the required simulation results obtained. The results are firstly used to confirm the functionality of the RBS. For one of the RBS concepts, the key performance measure results are shown in Figure 7. The figure shows that the RBS provided 79.6% of the braking requirement, the EROI of the RBS was 37% and the energy savings provided was 13.27%. In Figure 8, the flywheel speed is shown for the duration of the trip and illustrates how the flywheel is charged and discharged throughout the train route. From this, the functionality of the RBS is verified in that it performs braking and motoring as required to deliver energy savings.

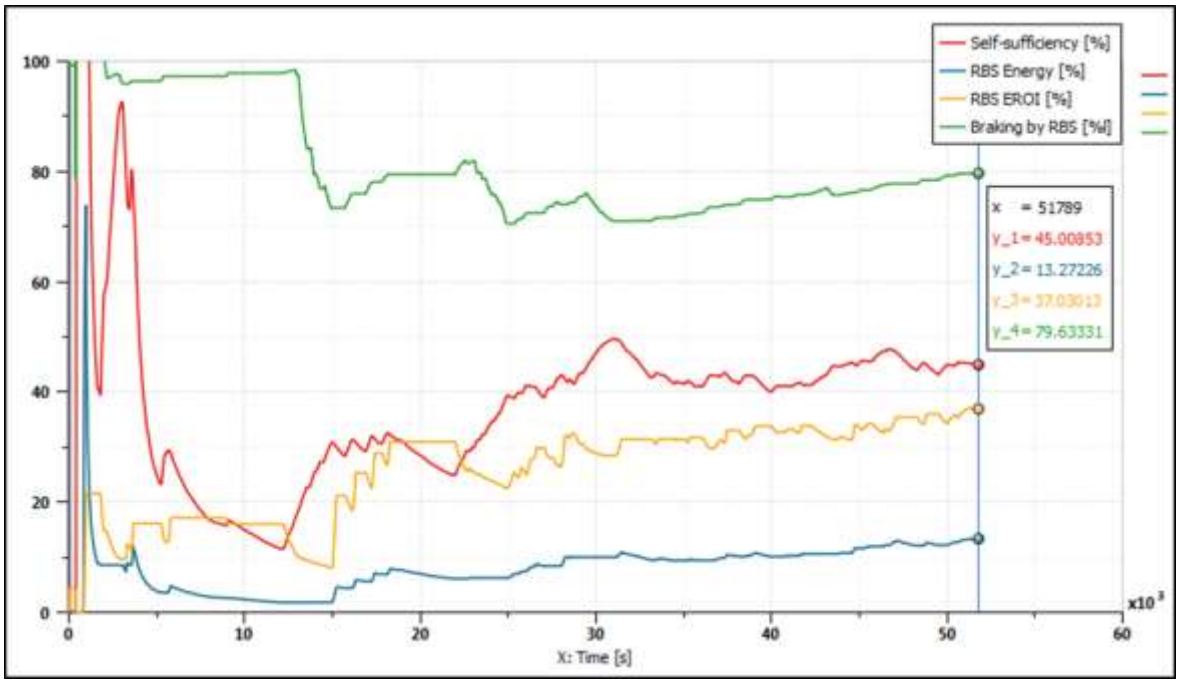

Figure 7. RBS Key Performance Measure Results

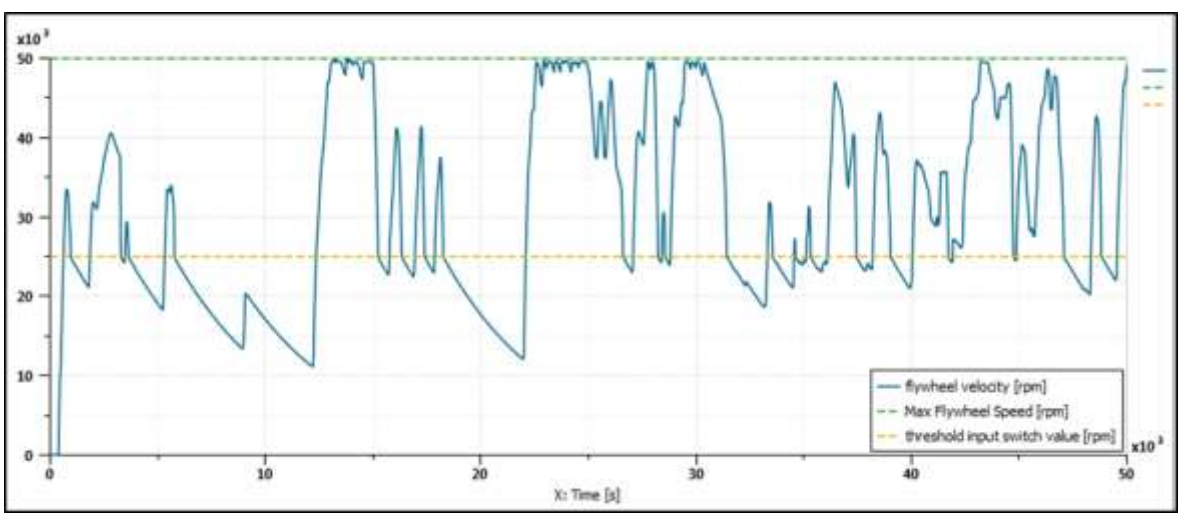

Figure 8. Flywheel speed results for Trip 1, Carbon Flywheel and CVT transmission.

Next, the performance of the various concepts is investigated and compared to the results obtained from the numerical simulations performed. In Figure 9, the energy savings achieved are plotted against the usable energy capacity for each concept, along with the energy savings calculated previously by the numerical analysis. A 2nd order polynomial trendline was fitted to the simulation results. The first observation made is that the energy savings achieved on both train trips are significantly lower than what was predicted numerically. We also observe that the trendlines do not indicate an upward trend in energy savings results with an increase in energy storage capacity for all scenarios, as was the case for the numerical analysis. The underperformance of the RBS when compared to the predicted energy savings from the numerical analysis is due to much lower than anticipated return efficiencies even though the amount of braking energy captured by the RBS correlated with the numerical analysis results, especially for the concepts without a CVT component.

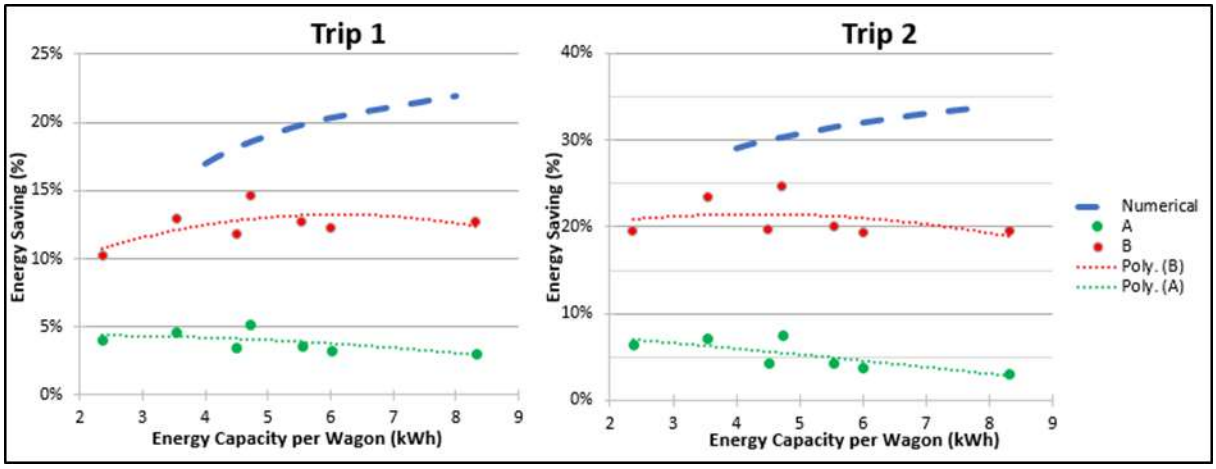

Figure 9. Energy Savings Results Comparison by Energy Capacity per Wagon

When the energy savings results are plotted for the number of RBS per wagon, as shown in Figure 10, for the concepts with carbon and aramid flywheels, increasing the number of RBSs on a wagon reduces the energy savings which is a result of more self-discharge losses as well as a large unusable energy storage capacity. Therefore, many of the candidate concepts could be eliminated from further investigation. The remaining candidate concepts (**as shown in Table 3)**, along with the energy savings results, serves as an input to the financial evaluation of the distributed RBS.

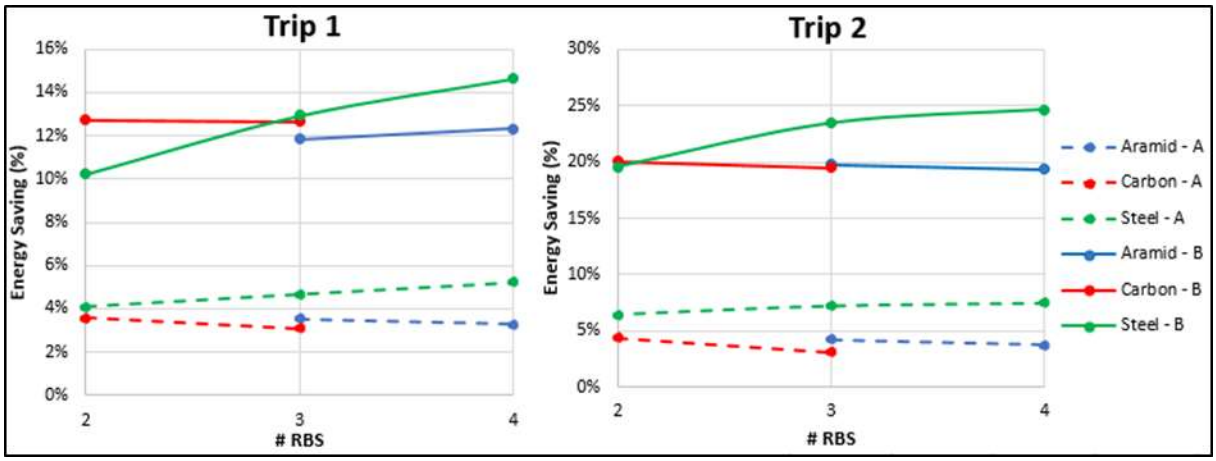

Figure 10. Simulated Energy Savings Results Comparison by Number of RBS per Wagon

Cost-Benefit Analysis

The financial feasibility of the proposed distributed RBS is investigated to establish whether the energy savings achieved by the system justifies the capital investment required. This is done by means of a cost-benefit analysis (CBA). An appropriate CBA procedure is identified from the literature (19,20). To ensure that a full picture of the financial feasibility is provided, multiple decision criteria are used to draw conclusions from including net present value (NPV), internal rate of return (IRR), benefit-cost ratio (BCR) and the payback period. The literature reviewed on CBAs all agree that the calculation of the cost (and benefits) throughout the lifecycle of a system is a challenge due to the uncertainty involved with estimating future cost. There are three main cost categories that must be considered for the cost benefit analysis: 1) initial capital cost, 2) operation and maintenance costs as well as 3) decommissioning and disposal cost. Furthermore, opportunity cost must also be included as system costs.

The initial capital cost of the system is calculated by determining the item cost of each major component of the system based on the mass or power rating of the component while also allowing for cost of auxiliary components and adaptations (14,21). The total initial cost of the RBS concepts is shown in Table 3 in South African Rand. As the mass of the system on each wagon is low compared to the total mass of a laden freight wagon (approximately 1%) it is not expected to significantly increase the energy cost or reduce the maximum payload of the train in general freight rail operations. The regenerative braking system will require maintenance however and this must be accounted for in the life cycle cost, as shown in Table 3.

Table 3. Total Regenerative Braking System Cost per Wagon

Concept	# RBS	Flywheel	Topology	Total Cost (ZAR)	Total Maintenance Cost (ZAR)
2	2	Carbon	B	R 393 430	R 187 013
9	4	Steel	A	R 572 594	R 226 368
10	4	Steel	B	R 619 136	R 272 910
11	3	Steel	A	R 434 766	R 175 096
12	3	Steel	B	R 481 193	R 221 523
13	2	Steel	A	R 297 009	R 123 896
14	2	Steel	B	R 343 474	R 170 361

The primary benefit of the distributed RBSs is energy saving which reduces the operating cost of the train. Another significant benefit is the reduction in greenhouse gases emitted which are harmful to the environment as well as associated cost in the form of carbon tax and emission trading schemes (22). Other benefits such as reduced maintenance on existing traction- and braking equipment, increased range and additional power which reduces the power requirements of the locomotive consist may also contribute to the worth of a RBS. For this study, the energy savings is considered as the only primary- and economically relevant benefit.

With the energy savings quantum already established, the next step is to convert the energy savings into economic value. To calculate the cost of traction energy from diesel-powered locomotives, the performance of a typical diesel locomotive is evaluated (6). The diesel locomotive has eight operating positions, referred to as notches, each with a different power output and accompanying fuel usage and emissions output. The fuel efficiency and energy cost for the locomotive was calculated for each of the locomotive notches, before a representative train duty cycle is used to calculate an averaged fuel efficiency and cost of energy based on the current diesel price (6,23). An average energy efficiency of 3.55 kWh/*l* and cost of energy of R3.55 ZAR/kWh was calculated. Using these values, the Rand value of the energy savings predicted for each RBS is calculated as shown in the Table 4.

Table 4. Annual Fuel Savings and Economic Benefit per Freight Wagon

Concept	Trip	Annual Energy Saving (kWh)[1]	Fuel Saving (litres)[2]	Fuel Saving (ZAR)[3]
2	1	18 925	5 335	R 67 172
	2	18 725	5 279	R 66 464
9	1	7 766	2 189	R 27 565
	2	6 990	1 971	R 24 809
10	1	21 806	6 147	R 77 397
	2	23 014	6 488	R 81 687
11	1	6 937	1 956	R 24 622
	2	6 758	1 905	R 23 985
12	1	19 250	5 427	R 68 326
	2	21 904	6 175	R 77 747
13	1	6 067	1 710	R 21 535
	2	6 016	1 696	R 21 354
14	1	15 215	4 289	R 54 003
	2	18 308	5 161	R 64 982

[1]85% Utilisation of fleet which results in 310 trips per annum. [2]Fuel efficiency of 3.55kWh/*l* [3]Diesel fuel price of R12.59/*l* (23).

Although not considered economically relevant at this stage, there is a global drive to reduce greenhouse gas (GHG) emissions is, and for this reason the reduction in these emissions as a result of the distributed RBS were calculated to indicate the further potential benefit of the system (6,22,24). The emissions output saving was determined to be significant, with reductions as much as 395kg and 93kg of nitrogen oxides (NOx) and carbon monoxide (CO) respectively, for a single freight wagon per annum.

The next step of the CBA is to define the distribution of costs and benefits over the life cycle of the distributed RBS and calculate the decision criteria as shown in Figure 11. For this analysis, the real lending rate is used as the discount rate for the CBA. From the South African Reserve Bank data this was calculated to be 4.1% averaged over the past 10 years (25). The CBA is performed in real terms and therefore inflation rates are not considered. The financial benefit of the RBS is directly correlated to the price of diesel

and from the United States (US) Energy Information Administration's (EIA) Annual Energy Outlook the annual real increase in diesel price is calculated to be 2.2% over the next 20 years (26).

The benefit and cost events are shown by the bars on the graph and these are summed over the life-cycle to calculate the nominal cumulative cash flow. We see that at year 6 the initial investment cost has been recovered (i.e. payback achieved). The costs and benefits are discounted using Equation 1 and the NPV is calculated as shown in Figure 11. From this, we see that although payback in nominal terms was achieved at year 6 of the system life cycle, the NPV which accounts for the time value of money only becomes positive at year 7 of the system life at which point the project becomes financially feasible. Similarly, the IRR and BCR are calculated using Equations 2 and 3.

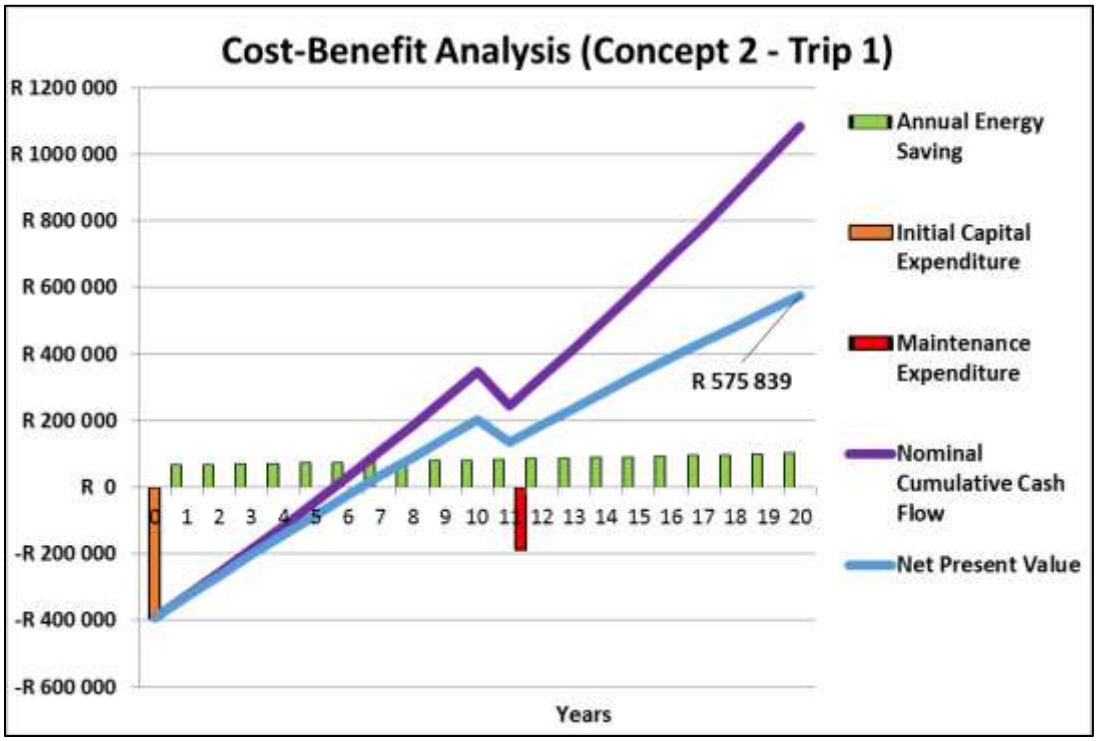

Figure 11. Cost-benefit Analysis Results – Concept 2, Trip 1

$$NPV = \sum_{t=0}^{n} \frac{B_t}{(1+i)^t} - \sum_{t=0}^{n} \frac{C_t}{(1+i)^t} \quad (1)$$

$$\sum_{t=0}^{n} \frac{B_t - C_t}{(1+i_{IRR})^t} = 0 \quad (2)$$

$$BCR = \frac{\sum_{t=0}^{n} \frac{B_t}{(1+i)^t}}{\sum_{t=0}^{n} \frac{C_t}{(1+i)^t}} \quad (3)$$

The results obtained on the two train routes for each concept are averaged and the results are shown in Table 5. The NPV decision criterion states that for a project to be feasible, the NPV for the project must be greater than zero. We see in the results that concepts 9, 11, 13 do not meet the criterion while the remaining concepts meet the criterion. The

same observation was made from the IRR, BCR and payback period criteria. The remaining four concepts (2, 10, 12 and 14) are all deemed economically feasible based on all four of the decision criteria. The differentiating factor between the feasible and non-feasible concepts is clearly the type of topology, with all topology A concepts deemed not feasible and all topology B concepts deemed feasible. The IRR and BCR, which indicate how efficiently capital is used, show that concept 14 delivers the best financial return and for this reason concept 14 is considered to provide the 'best' solution for the distributed RBS.

Table 5. Averaged Cost-benefit Analysis Results

Concept	# RBS	Flywheel	Topology	Payback period	NPV	IRR	BCR
2	2	Carbon	B	6	R 570 102	16.7%	2.11
9	4	Steel	A	-	R-293 357	-2.5%	0.59
10	4	Steel	B	8	R 495 554	11.6%	1.62
11	3	Steel	A	20	R-153 126	-0.2%	0.72
12	3	Steel	B	6.5	R 561 010	14.5%	1.90
13	2	Steel	A	17	R -28 837	3.0%	0.92
14	2	Steel	B	6.5	R 511 948	17.0%	2.13

Following the CBA, a sensitivity analysis was performed to investigate the robustness of the financial feasibility model of the RBS. The study investigated the effect of a 20% increase or decrease in: 1) energy savings performance 2) RBS cost 3) real fuel price escalation as well as 4) a combined case of the previous three factors. The sensitivity analysis revealed that for all the above cases, including the combined worst case scenario, the RBS remains feasible based on the NPV criteria and the NPV also improves significantly from the reference case for the positive scenarios. This provides more certainty to the financial model of the RBS for which certain assumptions were made in the process of estimating system- performance and cost.

Conclusions

The goal of the study presented in this paper is to determine whether a novel regenerative braking system (RBS) proposed in a patent by Transnet SOC is both technically and economically feasible. Although the potential benefit of RBS with on-board energy storage has been established and these systems have also been the subject of extensive research in the rail industry, these systems have not been widely adopted in the rail industry. The distributed RBS investigated in this study aims to overcome some of the limitations and challenges of on-board RBS in the freight rail industry.

A workable system concept was generated by establishing the requirements of the proposed RBS through numerical simulations and further developing the proposed system based on the technological characteristics and constraints identified for flywheel based RBSs. This process delivered 10 candidate concepts for the proposed system that promised to meet the system requirements. The synthesised system concepts are then simulated using physical system simulation software with the goal of determining the energy savings delivered by each concept, the primary performance measure of the RBS. Four additional system concepts were introduced during the simulation process based on initial findings from the simulation results to bring the total number of candidate concepts to 14. A CBA was performed which succeeded in determining the economic feasibility of each candidate concept, and also to select the 'best' concept which provides the highest return on investment. Although not considered economically relevant at this stage, it was also shown that there is a significant benefit in the form of reduced emissions delivered by the RBS. A sensitivity analysis was also performed which showed that for each of the cases investigated, the proposed distributed RBS remains economically feasible.

From the findings presented in this study as summarised above, we can conclude that the proposed distributed regenerative braking for freight trains is both technically and economically feasible. By demonstrating the technical and economic feasibility of the proposed system, a promising new solution for diesel-powered freight trains is presented. Further to this, the findings of both the numerical analyses and the system simulations of the RBS confirmed the potential of regenerative braking systems on freight trains and the value of pursing these systems, regardless of the specific means of implementation. This finding is in line with those of other studies for the rail industry.

The methodology developed in this study for establishing the technical and economic feasibility of a RBS is considered to be a contribution to the field by this study. A holistic approach is taken in which both the RBS technology and railway landscape is approached from a broad perspective and a high system level. Both the technical and economic perspectives of an RBS are considered thoroughly to give a complete picture of the proposed technology.

Funding statement

The author(s) received no financial support for the research, authorship, and/or publication of this article.

References

1. International Union of Railways, International Energy Agency. Railway Handbook 2016 [Internet]. 2016. Available from: www.uic.org

2. Rodrigue J-P, Comtois C, Brian S. The Geography of Transport Systems. 4th ed. New York: Routledge; 2013.

3. Barrero R., Tackoen X., Van Mierlo J. Stationary or onboard energy storage systems for energy consumption reduction in a metro network. Proc Inst Mech Eng Part F J Rail Rapid Transit. 2010;224(3):207–25.

4. Hillmansen S, Roberts C. Energy storage devices in hybrid railway vehicles: a kinematic analysis. Proc Inst Mech Eng Part F J Rail Rapid Transit. 2007;221:135–43.

5. González-Gil A, Palacin R, Batty P. Sustainable urban rail systems: Strategies and technologies for optimal management of regenerative braking energy. Energy Convers Manag. 2013;75(0):374–88.

6. Spiryagin M, Wolfs P, Szanto F, Quan Y, Nielsen D. Application of flywheel energy storage for heavy haul locomotives. Appl Energy. 2015;157:607–18.

7. Van der Meulen D, Moller F. Sustainable heavy haul traction energy: A review of systemic issues. J Rail Rapid Transit. 2014;228(6):687–94.

8. Pyper A. Regenerative Railway Braking System. Patent Cooperation Treaty; 2016.

9. Sun Y, Cole C, Spiryagin M, Godber T, Hames S, Rasul M. Conceptual designs of hybrid locomotives for application as heavy haul trains on typical track lines. J Rail Rapid Transit. 2013;227(5):439–52.

10. Transnet SOC Ltd. Long Term Planning Framework: Freight and energy demand forecast [Internet]. 2015. Available from: www.transnet.net/

11. European Commision. Paris Agreement [Internet]. 2015 [cited 2018 Mar 21]. Available from: https://ec.europa.eu/clima/policies/international/negotiations/paris_en

12. United Nations Climate Change. The Paris Agreement [Internet]. 2016 [cited 2018 Mar 25]. Available from: http://unfccc.int/2860.php

13. Vazquez S, Lukic SM, Ranquelo LG, Carrasco JM. Energy Storage Systems for Transport and Grid Applications. IEEE Trans Ind Electron. 2010;57(12):3881–95.

14. Berkel K Van, Rullens S, Hofman T, Vroemen B, Steinbuch M, Member S. Topology and Flywheel Size Optimization for Mechanical Hybrid Powertrains. IEEE Trans Veh Technol. 2014;63(9):4192–205.

15. Read MG, Smith RA, Pullen KR. Optimisation of fl ywheel energy storage systems with geared transmission for hybrid vehicles. Mech Mach Theory. 2015;87:191–209.

16. Druten RM van. Transmission design of the zero inertia powertrain. Technische Universiteit Eindhoven; 2001.

17. Kok D. Design Optimisation of a Flywheel Hybrid Vehicle. Technische Universiteit Eindhoven; 1999.

18. Genta G. Kinetic Energy Storage: Theory and Practice of Advanced Flywheel Systems. Oxford: Butterworth & Co.; 1985.

19. Department of Environmental Affairs and Tourism. Intergrated Environmental Management Information Series: Cost Benefit Analysis [Internet]. Pretoria; 2004. Available from: http://www.deat.gov.za

20. Beukes J. An Economic Analysis of Concentrator Photovoltaic Technology Use in South Africa : A Case Study. Nelson Mandela Metropolitan University; 2013.

21. Rupp A, Baier H, Mertiny P, Secanell M. Analysis of a fl ywheel energy storage system for light rail transit. Energy [Internet]. Elsevier Ltd; 2016;107:625–38. Available from: http://dx.doi.org/10.1016/j.energy.2016.04.051

22. Du Plessis P. The Potential of Solar Process Heat for South African Industry. University of Cape Town; 2011.

23. Republic of South Africa. Department of Energy [Internet]. 2018 [cited 2018 Feb 15]. Available from: http://www.energy.gov.za/

24. EY. EY Global Tax Alert [Internet]. 2017 [cited 2018 Mar 14]. Available from: http://www.ey.com/gl/en/services/tax/international-tax/alert--south-africa-publishes-second-draft-carbon-tax-bill-for-public-comment

25. South African Reserve Bank. South African Reserve Bank Historical Rates [Internet]. 2018 [cited 2018 Mar 15]. Available from: https://www.resbank.co.za/Research/Rates/Pages/SelectedHistoricalExchangeAndInterestRates.aspx

26. U.S. Energy Information Administration. Annual Energy Outlook [Internet]. 2018 [cited 2018 Mar 15]. Available from: https://www.eia.gov/outlooks/aeo/